УПРАВЛІННЯ У ТЕХНІЧНИХ СИСТЕМАХ

CONTROL IN TECHNICAL SYSTEMS

УПРАВЛЕНИЕ В ТЕХНИЧЕСКИХ СИСТЕМАХ

UDC 681.513

ALGORITHMS FOR TUNING OF THE COORDINATING AUTOMATIC CONTROL SYSTEMS

Gurskiy A. A. – PhD, Associate Professor of the Department of Technological Processes Automation and Robot-technical Systems, Odessa National Academy of Food Technologies, Odessa, Ukraine.

Goncharenko A. E. – PhD, Associate Professor, Associate Professor of the Department of Technological Processes Automation and Robot-technical Systems, Odessa National Academy of Food Technologies, Odessa, Ukraine.

Dubna S. M. – Lecturer of the Department of Technological Processes Automation and Robot-technical Systems, Odessa National Academy of Food Technologies, Odessa, Ukraine.

ABSTRACT

Context. The important task was solved during the scientific research related to the development of the algorithm for tuning of the coordinating automatic control system. The reason why the development of those algorithms is important is because of the progress in field of certain classes of complex multilayered control systems, which provide coordination of the transient processes while the regulating technological parameters.

Objective. The purpose of the scientific work is the minimizing of time and the automation of tuning process for the complex multilevel control systems.

Method. We offer the step-by-step tuning of the double-level coordinating systems of automatic control for the refrigeration facilities in the particular for the refrigerating turbocompressor facilities and systems with the tunnel refrigerating chambers. We offer the block-scheme of algorithms which may be used during the realization of automatic search for the system tuning parameters providing coordination of the transient processes under automatic control.

Results. The experiments were conducted in the Matlab 2012a environment. The result of the experiments is graphs of certain transient processes obtained on various steps of the tuning for multilevel coordinating automatic control system. Based on the simulation results we have done the conclusion about efficiency of the different algorithms. The possibility for using of the presented algorithms was also considered, particularly the specificity of the functioning of the automatic tuning of the automatic control multilevel system complex.

Conclusion. These experiments have showed the applicability of certain algorithms of step-by-step tuning for the double-level coordinating automatic control system. It is estimated, that the automatic tuning of the automatic control coordinating systems with algorithm utilization will increase the scope of the modern intellectual technologies.

KEYWORDS: Petri net, coordinating automatic control system, coordination of transient processes, ratio control, algorithms of tuning.

ABBREVIATIONS

CACS is a coordinating automatic control system;
ACS is an automatic control system.

NOMENCLATURE

$G_{x.a}$ is a compressor capacity;
π_k is a degree of pressure increase;
$\varphi(t)$ is a deviation from ratio of variables;
X_1 is an actual value of the controlled variable;
$P_{kip.z}$ is a set point of the boiling pressure;
P_{kip} is an actual value of the boiling pressure;
$e(t)$ is a deviation of the controlled variables within time;
J_{0i} is an integral criterion of system;
u_1, % is a control action on the flow of cooling water on the condenser;
u_2, % is a control action linked to the speed of rotation of the compressor shaft of the refrigeration plant;
u_a is a control action to change the ratio;
A^T is a coefficient matrix;
p is a differential operators.

© Gurskiy A. A., Goncharenko A. E., Dubna S. M., 2020
DOI 10.15588/1607-3274-2020-1-19

INTRODUCTION

The coordination of transient is implemented in the range of multilevel automatic control systems. The lower level of such systems is linked to the liquidation of deviations from the ratio of the values of regulated variables. The upper level is linked to the liquidation of errors in the system. In the 20th century the well-known scientists Ignatienv M. B., Boichuk L. M. explored actively the systems under consideration [1–3]. Nowadays the coordinating control systems for refrigeration plants are designed. The development of these systems is carried out in the field of technological tasks [4, 5]. On this subject there are plenty of the similar scientific papers [6, 7], for example, in the field of control in the robotic systems [8–10] or in the field of air-fuel ratio control in the engines [11–13].

The design methods of coordinating automatic control systems were well represented in the scientific work by Boichuk L. M. [2]. In our days a lot of research centres explore the various automatic control systems and the corresponding methods of designing and analysis. These methods in designing of the systems of coordinating control are presented for the certain field of linear systems [3]. Therefore the design of tuning algorithms of control systems presented in scientific papers [4, 5, 10] is **relevant**. As these systems in the certain cases belong to the field of nonlinear systems. At the same time, these systems develop as the specific class of multilevel automatic control systems, thereby confirming the relevance of developing appropriate algorithms of tuning.

The object of study is the processes of tuning up of the coordinating automatic control systems.

The subject of study is the methods and algorithms of tunings for the coordinating automatic control systems.

The purpose of the scientific work is to minimize the time and automate of process in tuning of the multilevel coordinating automatic control systems.

1 PROBLEM STATEMENT

To achieve this purpose it is necessary to design the algorithms of tuning for the corresponding multilevel control systems. These algorithms of tuning are required to design for the complex non-linear control systems for which the known methods of synthesis are unacceptable.

As a result of analysis of the developed algorithms for tuning of the multilevel systems it is important for us to determine their fundamental suitability. It is also necessary to determine the scope of application for these algorithms in the system of automatic tuning with the intelligent technology. This intellectual system was shown in scientific work [14, 15] related to the automatic synthesis of Petri nets based on functioning of the neural networks.

The developed algorithms for tuning of the multilevel control system are acceptable, if they allow to determine all the values of the parameters $K \in k_{ij}$ of various levels for the control system. These parameters of tuning $K \in k_{ij}$ must give the minimum value of the integral criterion J in the multilevel system. The integral criterion of system is:

$$J = \int_0^\infty (|e(t)| + \beta \cdot |\phi(t)|)dt \to \min , \qquad (1)$$

where β is coefficient indicating the temporal coordination of the control processes; $\varphi(t)$ is deviations from the ratio of the values of regulated variables; $e(t)$ is the deviation of some variable in time from the given value.

2 REVIEW OF THE LITERATURE

Ratio systems controls or coordinating control systems have researched in the different countries. The design of these systems has not lost its relevance in the 21st century. Now there are a number of English scientific works related to the development the air-fuel ratio control systems for engines. In these works [11–13, 16] the control systems block diagrams are presented. They can also be classified as the multilevel coordinating automatic control systems.

In Ukraine there are a lot of scientific works [8–10] relayed to the control of robotic manipulators. The special cases of the implementation of the trajectory tasks of the coordinating control are presented in these scientific works. The scientific papers of Ignatiev M. B, Miroshnik I. V., Boychuk L. M., Tsybulkin G. A. [2, 3, 8, 17] are considered as the fundamental scientific works in the design of the corresponding systems.

The scientific work by Boychuk L. M. [2] has become the basis for the design of some control systems for refrigeration plants. First of all this is the design of the coordinating automatic control system model providing the energy-efficient functioning of the cooling turbo-compressor plant [4]. Then the system was presented for evaluating of the energy efficiency of the functioning of a turbo-compressor plant for ammonia overload at the Odessa Port Plant [18]. The next stage was the development of control system for the laboratory unit with the cooling tunnel chamber [5]. Considering these scientific papers [4, 5, 10] it is possible to present the general simplified block diagram of the coordinating automatic control system. This block diagram is shown in figure 1. This control system represents the principles of operation and the main features of the architecture described in the scientific papers by Boichuk L. M. and Miroshnika I. V. [2]. However, such control system differs from similar systems presented in various papers [2, 8, 11, 19, 20].

There are the following main differences of the coordinating automatic control system under consideration from similar systems.

1. The control signals are formed as the sum of control signals of the lower and upper levels of the system.
2. There is an adjustment of the given ratio of parameters based on the automatic optimizer.
3. The control is implemented in the field of nonlinear systems.
4. There are no internal control loops at the lower level of the CACS.

Accordingly, we need methods for tuning of the coordinating automatic control system and in order to these

© Gurskiy A. A., Goncharenko A. E., Dubna S. M., 2020
DOI 10.15588/1607-3274-2020-1-19

methods would be acceptable not only in the class of well-known linear systems [2, 3]. In this regard, this paper shows presents experiments related to the tuning of systems in this class.

3 MATERIALS AND METHODS

The considered coordinating automatic control system is two-level. The lower (first) level of control in this system is linked to the liquidation of deviation from the ratio of the values of regulated variables X_1 and X_2. And the upper (second) level of control is linked to the liquidation of the difference between the set and the actual value of the controlled variable.

This coordinating control system adjusts to the deviding of motions mode. It lets to eliminate the deviation from the ratio of variables X_1 and X_2 in the transition process is linked to the liquidation of error in the system. This is shown graphically in Fig. 1. The movement of the system from the initial point X_0 to the final X_k in the space of variables X_1 and X_2 is shown. Movement along the trajectory 1 corresponds to the traditional automatic control system and movement along the trajectory 2 corresponds to the coordinating automatic control system. The deviding of motions mode provides the initial motion towards the multitude M of the ratios, and then by the multitude M to the end point X_k.

In the MATLAB \ Simulink software environment we have implemented the model of coordinating automatic control system for the development of the tuning algorithms (Fig. 2). The refrigeration turbocompressor is the control object in this system. The refrigeration turbocompressor model is represented as the linear system. It gives some error in the simulation results. However this inaccuracy does not interfere with scientific research for the design of methods for the synthesis of CACS.

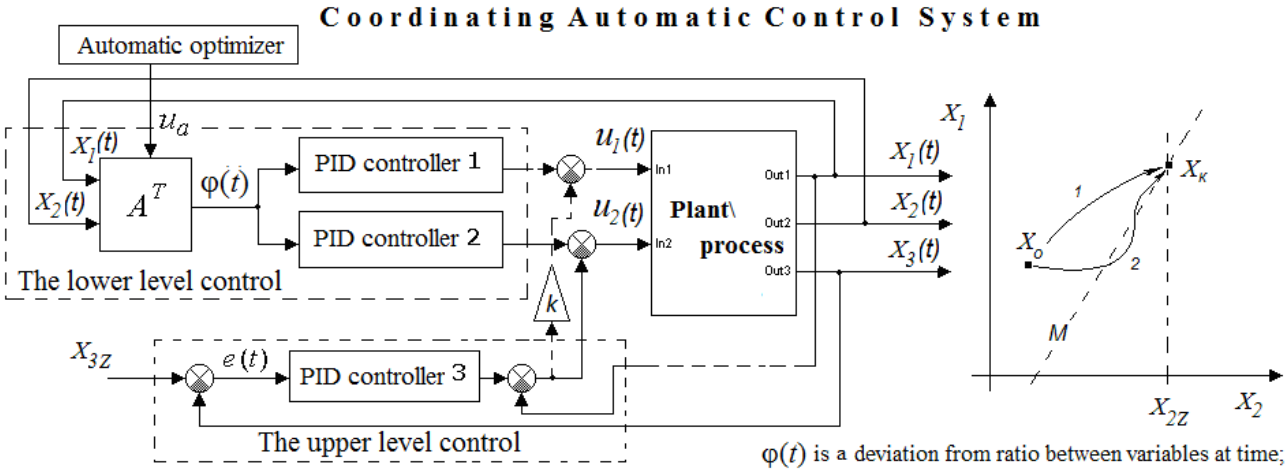

Figure 1 – The simplified block diagram of the coordinating automatic control system

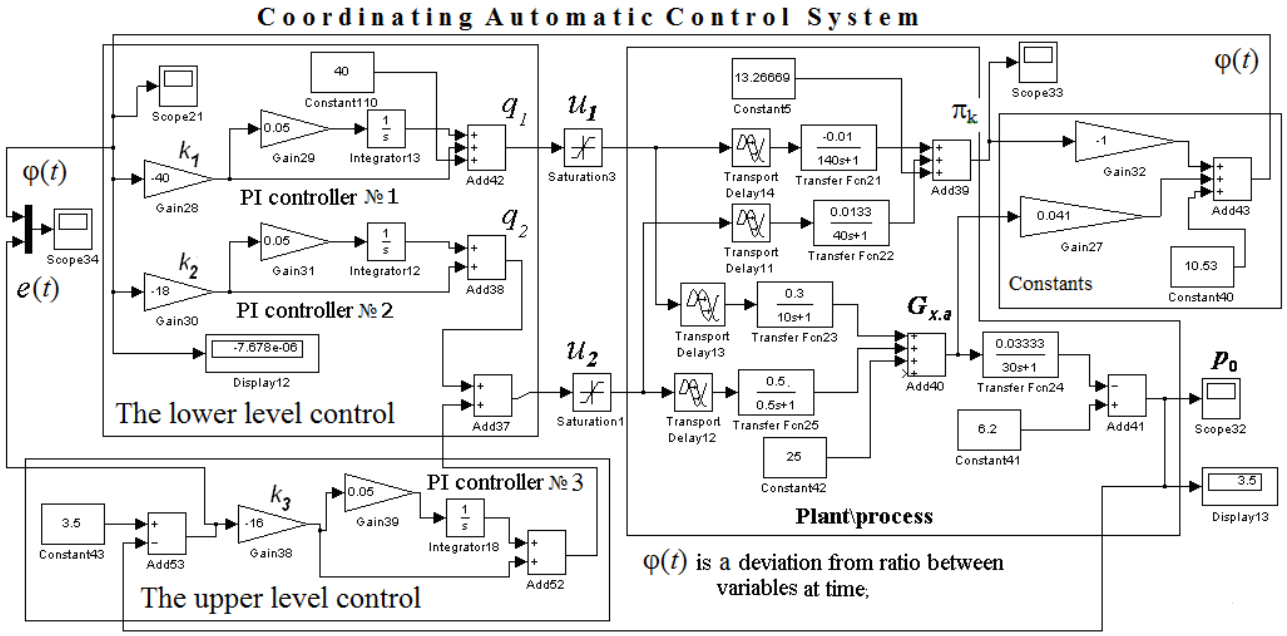

Figure 2 – Block diagram of the model of the coordinating automatic control system presented by means of the MATLAB \ Simulink software environment

© Gurskiy A. A., Goncharenko A. E., Dubna S. M., 2020
DOI 10.15588/1607-3274-2020-1-19

We have represented the system control law in the following way:

$$\bar{u} = \bar{u}_q + \bar{u}_p = \begin{bmatrix} u_1 & u_2 \end{bmatrix}^T , \quad (2)$$

where

$\bar{u}_q = \begin{bmatrix} u_{q1} \\ u_{q2} \end{bmatrix} = \begin{bmatrix} k_1 \cdot (1 + k_{11} \cdot p) \\ k_2 \cdot (1 + k_{21} \cdot p) \end{bmatrix} \cdot \phi$ is the law of lower level control;

$\bar{u}_p = \begin{bmatrix} u_{p1} \\ u_{p2} \end{bmatrix} = \begin{bmatrix} 0 \\ (P_{kip.z} - P_{kip}) \cdot k_3 (1 + k_{31} \cdot p) \end{bmatrix}$ is the law of upper level control;

$\phi = k \cdot G_{x.a} - \pi_k + b$ is the deviation from ratio of the parameters. This ratio ensures the functioning of the turbocharger with maximum efficiency; $\pi_k = p_k / p_0$ is degree of pressure increase; P_{kip} is actual value of the controlled variable; $P_{kip.z}$ is set point of the boiling pressure; $G_{x.a}$ is compressor capacity; p is differential operators; u_1, % is control action on the flow of cooling water on the condenser; u_2, % is control action linked to the speed of rotation of the compressor shaft of the refrigeration plant; k is coefficient for the ratio; b is constants.

The tuning of this system must be implemented taking into account for ensuring the necessary peculiarities of its functioning, Such as the coordinating change of compressor capacity $G_{x.a}$ and the degree of pressure increase $\pi_k = p_k / p_0$ during the regulation of the boiling pressure $P_{kip} \approx P_0$. The coordinating change of compressor capacity $G_{x.a}$ is possible within tuning of the system for deviding of motions mode.

The researches have shown that it is possible to define two main algorithms for the step-by-step tuning of the coordinating system to the deviding of motions mode.

At the beginning of the tuning all parameters k_1, k_2 and k_3 of the regulators №1, №2 and №3 are equal to zero.

According to the first algorithm the main regulator №1 of the 1st lower coordinating control level is set up initially. The tuning is implemented according to such integral criterion:

$$J_{01} = \int_0^\infty \phi^2(t) dt \to \min . \quad (3)$$

The transient characteristics for deviations from the ratio of variables at different values of the parameter k_1 of the regulator №1 and at corresponding values of the criterion J_{01} are presented in Fig. 3.

At the second stage the regulator №3 of the upper level of control is set up according to the integral criterion:

$$J_{02} = \int_0^\infty (|e(t)| + 3 \cdot |\phi(t)|) dt \to \min . \quad (4)$$

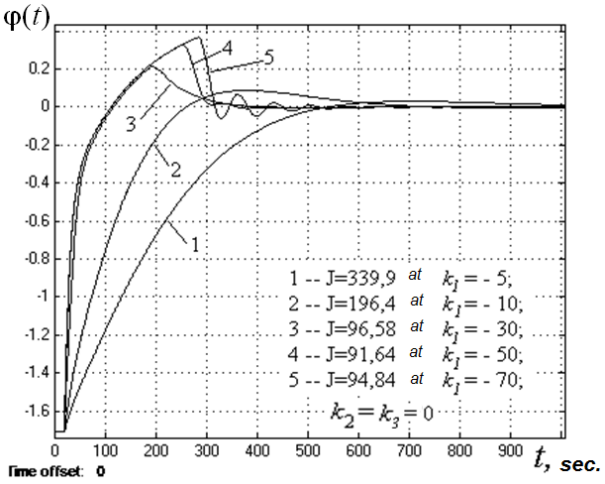

Figure 3 – The transient responses showing by deviation *φ(t)* from the given ratio of variables within time. The transitional responses got at different values of the tunings parameters in the coordinating automatic control system

At the final stage regulator №2 of the 1st lower coordinating level of control is set up according to the criterion:

$$J_{03} = \int_0^\infty (|\phi(t)| + |e(t)|) dt \to \min . \quad (5)$$

All transient processes obtained at various stages of the system tuning setup are shown in Fig. 3–5.

The second algorithm of tuning consists of four stages. At the first stage the tuning of regulator of upper level according to the integral criterion is presented:

$$J_{00} = \int_0^\infty |e(t)| dt \to \min . \quad (6)$$

Then the regulator of coordinating level is set up according to the corresponding criterion:

$$J_{01} = \int_0^\infty |\phi(t)| dt \to \min . \quad (7)$$

At the third stage the tuning of upper level regulator №1 are adjusted again according to the criterion:

$$J_{02} = \int_0^\infty (2 \cdot |\phi(t)| + |e(t)|) dt \to \min . \quad (8)$$

At the last stage the regulator №2 of the coordinating level is adjusted according to the criterion:

$$J_{03} = \int_0^\infty (|\phi(t)| + |e(t)|) dt \to \min . \quad (9)$$

4 EXPERIMENTS

All necessary experiments were performed in the MATLAB \ Simulink 2012 software environment. Initially it is necessary to implement a model of the coordinating automatic control system to conduct experiments

© Gurskiy A. A., Goncharenko A. E., Dubna S. M., 2020
DOI 10.15588/1607-3274-2020-1-19

in the software environment. The block diagram of this model is presented in Fig. 2. All parameters in the model of the control object and in the corresponding control system are also presented in Fig. 2. Possessing the appropriate software you can realize experiments using the necessary data presented only in Fig. 2–4. To verify the principle suitability of the considered algorithms we have obtained transients at various stages of the tuning in the control system. These transients and the corresponding parameters k_1, k_2, k_3 of the coordinating control system are presented in Fig. 4 and 5.

It is interesting to note the specific experiment shown in Fig. 6. If the control action of the upper level of the coordinating control system is connected with the control action u_1, then we must change accordingly the tuning of algorithms.

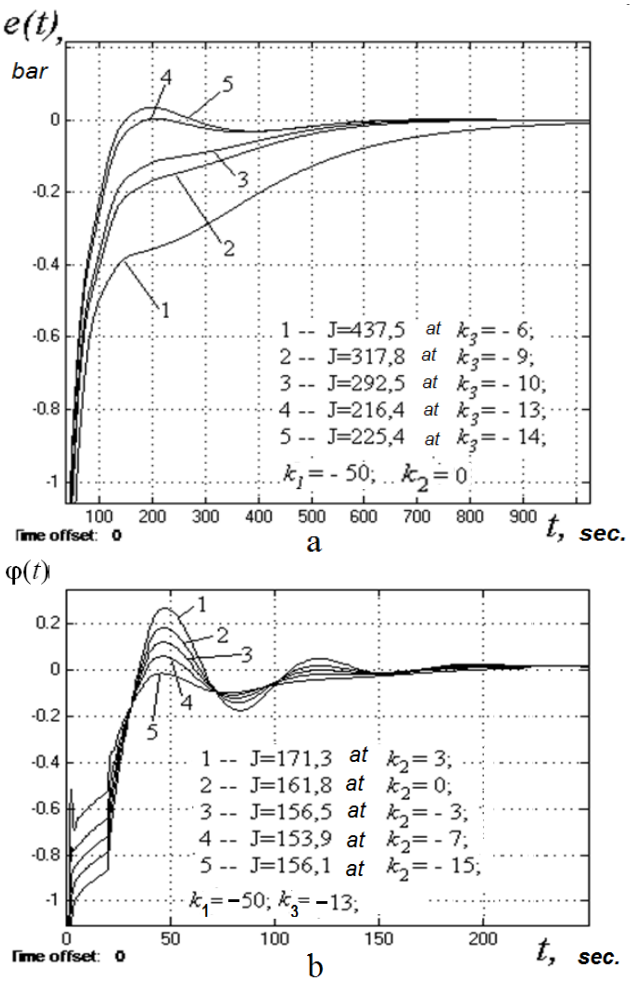

Figure 4 –The transient characteristics of the coordinating automatic control system at different values of the tunings. The transient characteristics showing the deviation $e(t)$ from the set value are presented in Fig. 4a. The transient characteristics showing the deviation $\varphi(t)$ from the given ratio of variables are presented in Fig. 4b.

The block diagram of such system is also shown in Fig. 6. As a result of modeling of this system it is possible to obtain the necessary transients. These transients processes fairly accurately represent the coordination of the regulatory processes and the tuning of the system to the deviding of motions mode.

We can see from the transient graphs that the deviation $\varphi(t)$ from the ratio of the variables was practically reduced to zero three times faster than the deviation $e(t)$ of the controlled variable from the set value (Fig. 6). According to the deviding of motions mode in the time interval from 200 seconds to 1200 seconds the movement was provided in the multitude of controlled ratio.

5 RESULTS

We can see from the graphs of transient processes presented in Fig. 3–5, the phased tuning of the coordinating automatic control system is carried out under the condition of its stable operation. The minimum value of the corresponding integral criterion and the corresponding values of the regulators tunings are determined at each stage of the control system tuning.

We can conclude based on the analysis of the simulation results obtained at various algorithms of the phased tuning of the coordinating control system. The four-step tuning algorithm provides slightly faster way for the system to reach the target multitude of controllable ratios (figures 5d and 4c). Accordingly, the value of the integral criterion of the quality (J_{03}=139.8) for the system is less with the four-stage algorithm than with the three-stage (J_{03} = 153.9).

6 DISCUSSION

The described tuning algorithms are phased due to the structural features of multi-level systems. This case is suitable not only for multi-level systems of the coordinated regulation. The tuning of cascade control system also presumes the phased tuning. For example, at first it is necessary to set the inside control loop and then to set the outer loop.

We should also note the scientific paper [2]. In this scientific paper there is some process of step-by-step system synthesis in which initially the coordinating control system is considered as the one-level control system and then as the multi-level one.

The phased tuning algorithms are represented in the form of flowcharts shown in Fig. 7 and accordingly, in the form of Petri nets in Fig. 8.

Petri net formation is the important component for representation of the tuning process of the control system. If the automatic tuning of the coordinating control system is carried out, then the formed Petri net represents to the user the definite process of retraining the specific artificial neural network. In this case the neural network represents the intellectual feature of the automatic tuning systems, i.e. such network is able to learn at the operation of various systems.

The simplified block diagram of control system with the automatic tuning algorithm is shown in Fig. 9. Thus, it is possible to set up the system to deviding of motions mode.

© Gurskiy A. A., Goncharenko A. E., Dubna S. M., 2020
DOI 10.15588/1607-3274-2020-1-19

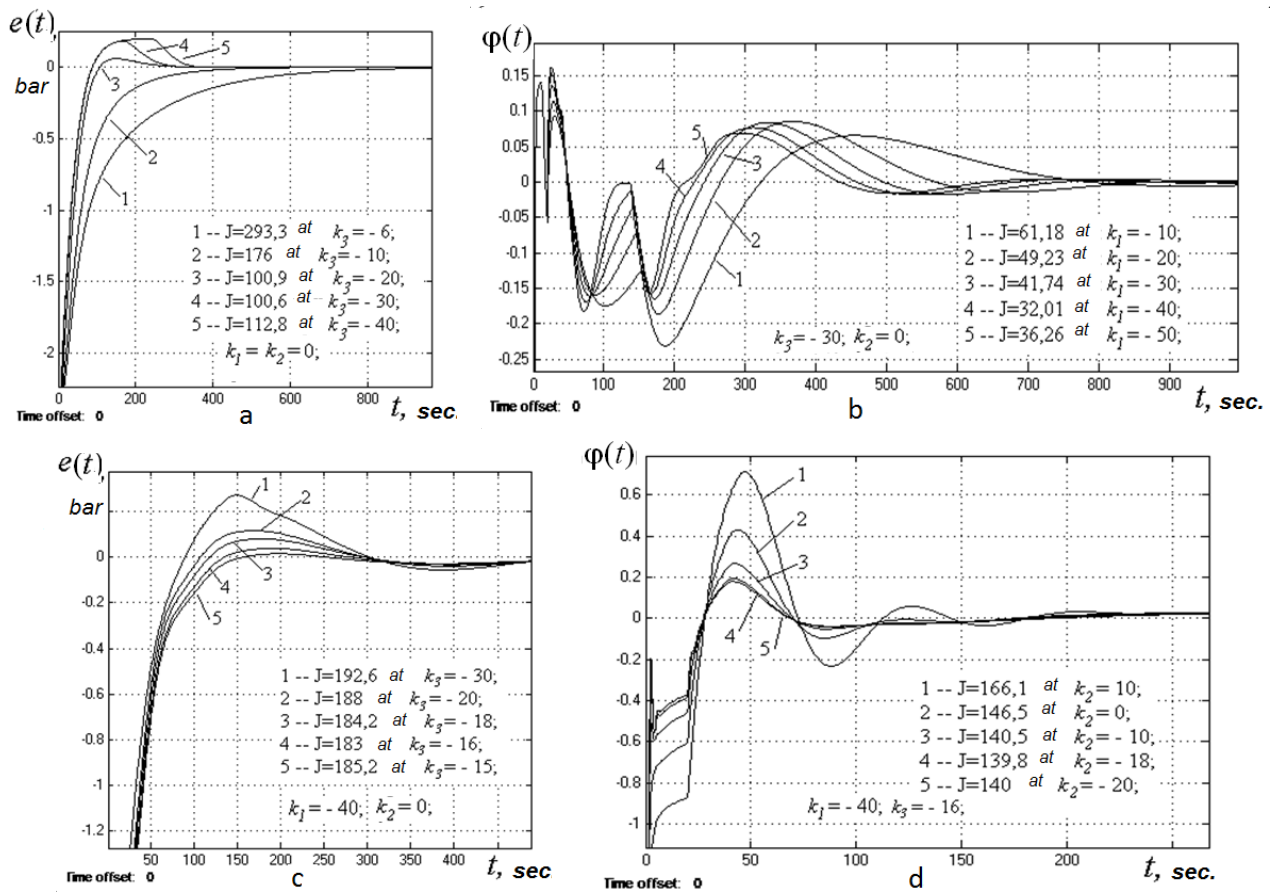

Figure 5 – Transients in the CACS for the different values in the parameters of the regulators. These transients are obtained at the stage of tuning by the four-step algorithm. Figure 4a and 4c – transient characteristics of the deviation $e(t)$ of the controlled variable from the specified value; figures 5b and 5d – transient characteristics of the deviation $\varphi(t)$ from the ratio of variables

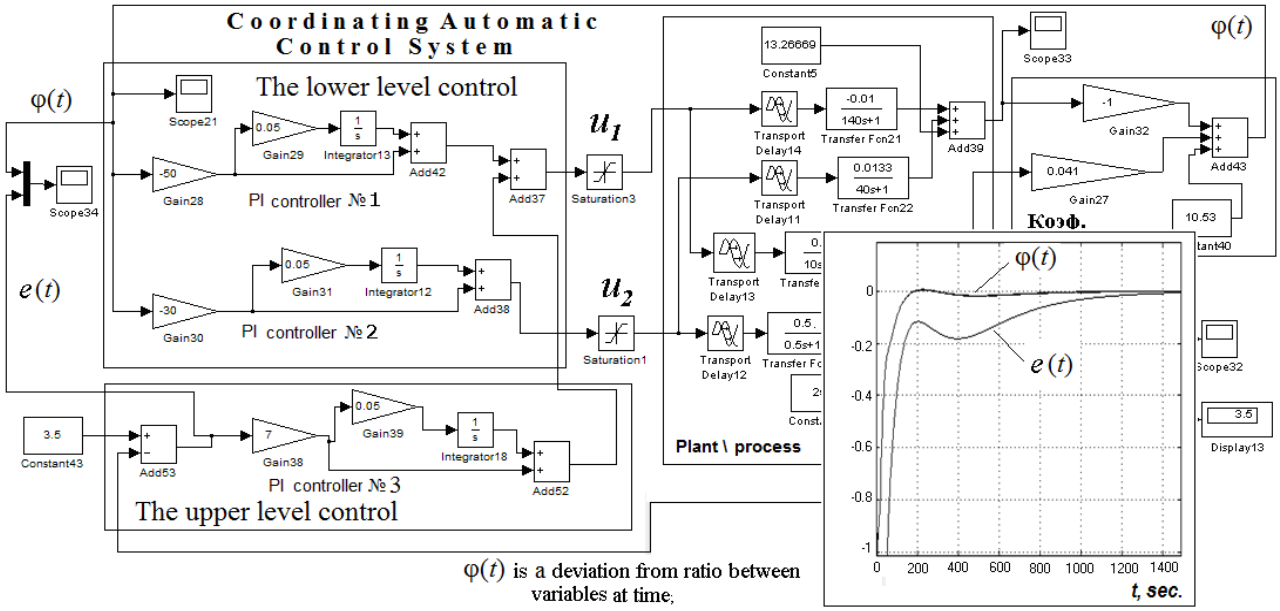

Figure 6 – Block diagram of the model of the coordinating control system and the graphs of transient processes on the deviation $\varphi(t)$ from the ratio of the values of the controlled variables and on the deviation $e(t)$ of the regulable variable from the specified value

The artificial neural network forms the algorithm for tuning the control system in the kind of Petri net, it is just shown in Fig. 9. If the algorithm of tuning for the control system is unsatisfactory, then the artificial neural network is rebuilt according to the formed Petri net. This algorithm for retraining of the artificial neural network was pre-

© Gurskiy A. A., Goncharenko A. E., Dubna S. M., 2020
DOI 10.15588/1607-3274-2020-1-19

sented in the scientific work [15] as the first experience to implement this system.

CONCLUSIONS

The scientific novelty of the results. The problem associated with the development of tuning algorithms for the highlighted class of automatic control systems was solved in the present work. Thus the design technique of corresponding coordinating systems has got the further development.

The practical significance of the results. The completed scientific researchers have confirmed the suitability of the developed algorithms for tuning of the coordinating automatic control systems. Due to these algorithms we can solve the problem of automated tuning for models of the complicated control systems providing the coordination of various transients.

The prospects for further research. The problem of automated tuning for the coordinating control systems may be related to the field of automatic generation of Petri nets and to the field the learning of neural nets, namely, the self-learning of neural networks at the synthesis of Petri nets.

ACKNOWLEDGMENTS

The scientific work was carried out at the department of technological processes automation and robotic systems.

The authors would like to give thanks N. Pantelyuk. He heads the laboratory for automation of refrigeration machines and plant. He designed the laboratory plant with a tunnel cooler. The corresponding studies of various control algorithms were carried out at this laboratory plant.

The authors also would like to give thanks the leadership of the Odessa Refinery Plant. The Odessa Refinery Plant has given experimental data related to ammonia cooling. These experimental data were necessary to complete a number of scientific works in the sphere of modeling automatic coordinating control systems.

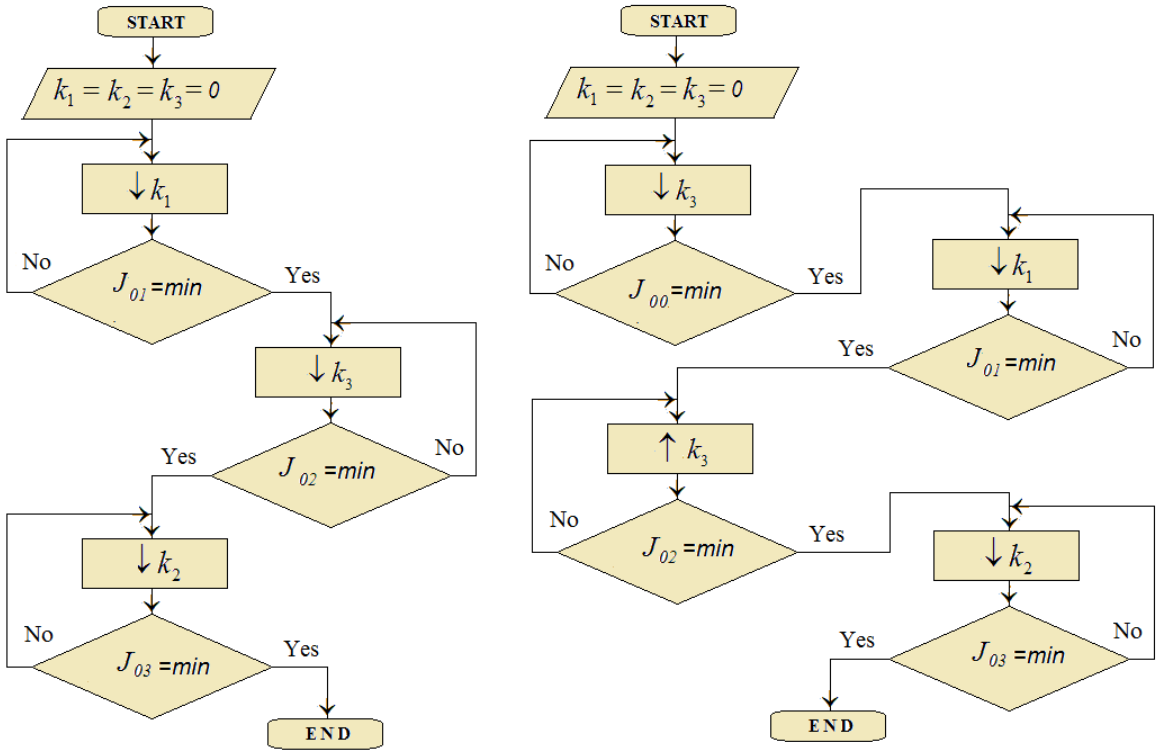

$$J_{01} = \int_0^\infty \varphi^2(t)\, dt \to \min = 91{,}64 \text{ at } k_1 = -50;$$

$$J_{02} = \int_0^\infty (|e(t)| + 3 \cdot |\varphi(t)|) dt \to \min = 216{,}4 \text{ at } k_3 = -13;$$

$$J_{03} = \int_0^\infty (|\varphi(t)| + |e(t)|) dt \to \min = 153{,}9 \text{ at } k_2 = -7;$$

$$J_{00} = \int_0^\infty |e(t)| dt \to \min = 100{,}6 \text{ at } k_3 = -30;$$

$$J_{01} = \int_0^\infty |\varphi(t)| dt \to \min = 32{,}01 \text{ at } k_1 = -40;$$

$$J_{02} = \int_0^\infty (2 \cdot |\varphi(t)| + |e(t)|) dt \to \min = 183 \text{ at } k_3 = -16;$$

$$J_{03} = \int_0^\infty (|\varphi(t)| + |e(t)|) dt \to \min = 139{,}8 \text{ at } k_2 = -18;$$

Figure 7 – Flowcharts representing the phased tuning of the coordinating automatic control system; ↓ $k1$, ↓ $k2$ and ↓ $k3$ are decrease in the values of the parameters $k1$, $k2$ and $k3$; ↑ $k3$ is increase in the value of the $k3$ parameter

© Gurskiy A. A., Goncharenko A. E., Dubna S. M., 2020
DOI 10.15588/1607-3274-2020-1-19

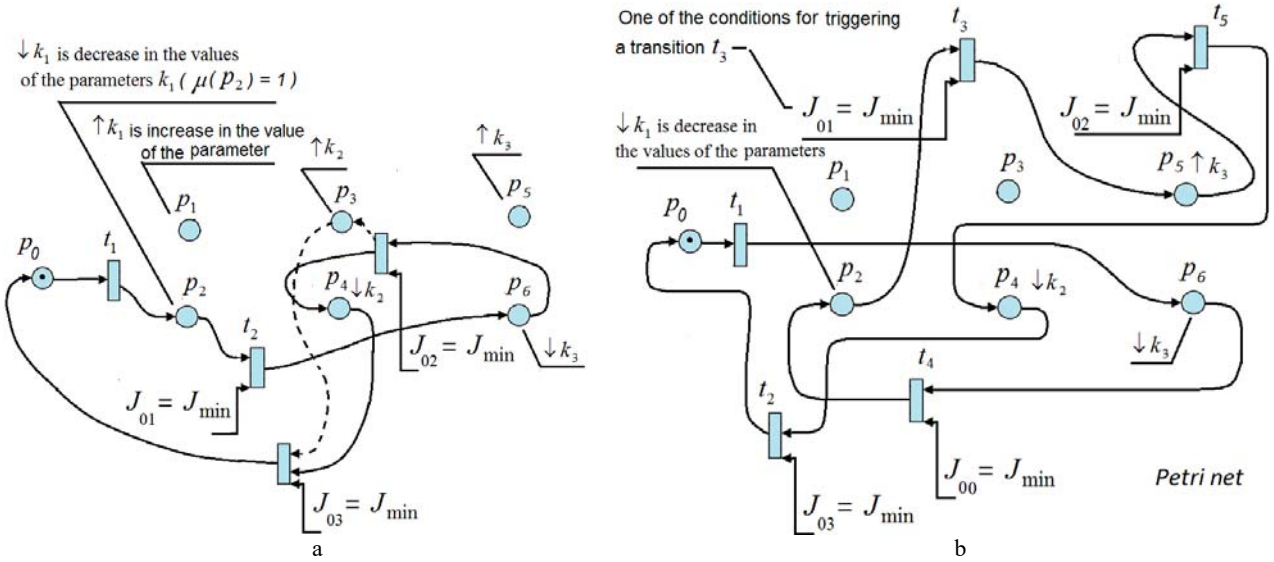

Figure 8 – The Petri nets representing the algorithms of phased tuning for the CACS. The Petri net representing the three-step algorithm for tuning of the coordinating automatic control system is shown at Fig. 8a. The Petri net representing the corresponding four-step algorithm of tuning is shown at Fig. 8b.

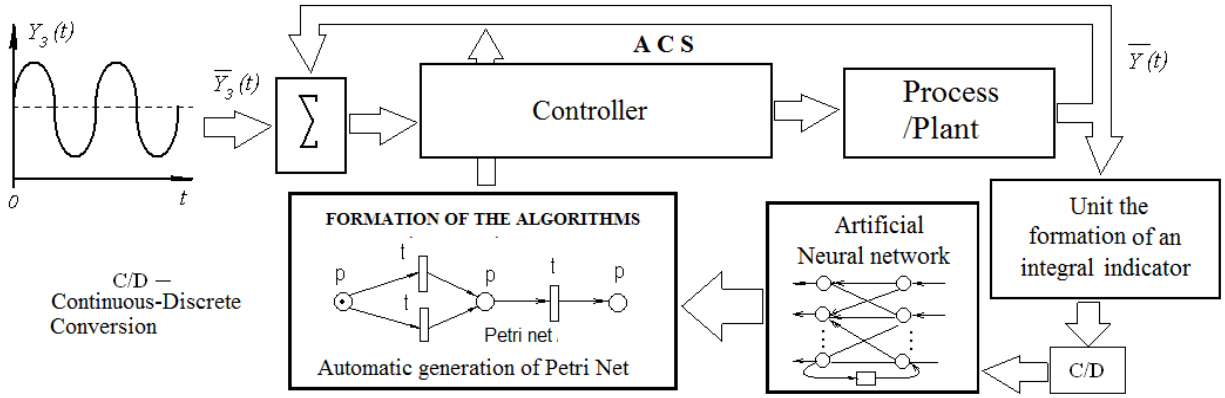

Figure 9 – The simplified block diagram of the control system with algorithm of the automatic tuning

REFERENCES

1. Boichuk L. M., Kratov G. I., Dykhanov V. P. Controlling a Long String of Moving Vehicles via Dynamic Coordination Technique, *IFAC Proceedings Volumes*, 1995, Vol. 28, No. 10, pp. 165–168. DOI: https://doi.org/10.1016/S1474-6670(17)51511-6
2. Boichuk, L. M. Synthesis of coordinated systems of automatic control. Moscow, Energoatomizdat, 1991, 160 p. ISBN 5–283–01521–1
3. Filimonov A. B., Filimonov N. B. The issues of synthesis for coordinating automatic control systems, *Izvestiya SfedU, Engineering sciences*, 2012, Vol. 3, pp. 172–180. ISSN 1999–9429 2311–3103
4. Gurskiy A., Denisenko V., Goncharenko A. Systems of refrigerating centrifugal compressors capacity automatic control, *Refrigeration Engineering and Technology*, 2013, No. 5, pp. 72–76. ISSN 0453-8307
5. Dubna S. M., Gurskiy A. A., Goncharenko A. E. The working out of algorithms in control of the cooling processes of products in the tunnel cameras, *Refrigeration Engineering and Technology*, 2018, No. 5, pp. 72–76. ISSN 0453-8307
6. Romanenko V. D., Milyavsky Yu. L. The design of coordinating control algo-rithm for the thermal mixing aggre-gate under external dis-turbances, Research Bulletin of NTUU "Kyiv Polytechnic Institute", 2011, No. 1, pp. 84–89. ISSN 1810-0546
7. Romanenko V. D., Milyavsky Yu. L. Multivariate object coordinating control with multirate sampling in stochastic environment, *System research & information technologies*, 2011, No 2, pp. 7–20. ISSN 2308-8893 (Online).
8. Tsybulkin G. A. Two-level coordinating control of a manipulation robot with kinematic redundancy, *Problems of Control and Informatics*, 1995, No. 3, pp. 143–150. ISSN 0572-2691
9. Tsybulkin G. A. The corrective automatic control of trajectory. Kiev, Stal, 2012, 161 p. ISBN 978–617–676–011–5
10. Gurskiy A. A., Goncharenko A. E., Dubna S. M. Coordinating automatic control systems of the robot manipulator drivers, *Automation of technological and business processes,* 2018, No. 4, pp. 11–21. ISBN 2312–3125
11. Chatlatanagulchai W., Rhienprayoon S., Yaovaja K., Wannatong K. Air/fuel ratio control in diesel-dual-fuel engine by varying throttle, *EGR valve, and total fuel. – SAE Technical Paper*, 2010, Issue 2010-01-2200. DOI: https://doi.org/10.4271/2010-01-2200
12. Jiao X., Zhang J., Shen T., Kako J. Adaptive air-fuel ratio control scheme and its experimental validations for port-injected spark ignition engines, *International Journal of Adaptive Control and Signal processing*, 2015, Volume 29, Issue 1, pp. 41–63. DOI: 10.1002/acs.2456.
13. Wong H., Wong P., Vong C. Model predictive engine air-ratio control using online sequential relevance vector machine, *Journal of Control Science and Engineering*, 2012, Vol. 2012, P. 2. DOI:10.1155/2012/731825.
14. He D. W., Strege B., Tolle H., Kusiak A. Decomposition in automatic generation of Petri nets for manufacturing system control and scheduling, *International Journal of Production Re-*

© Gurskiy A. A., Goncharenko A. E., Dubna S. M., 2020
DOI 10.15588/1607-3274-2020-1-19

search, 2000, Vol. 38, Issue 6, pp. 1437–1457. DOI: 10.1080/002075400188942
15. Gurskiy A. A., Dubna S. M. Tuning of neural network during automatic synthesis of Petri nets, *Automation of technological and business processes,* 2018, No. 1, pp. 22–32. DOI: https://doi.org/10.15673/ atbp.v10i1.877
16. ZENG Ting-jian, LUO Zhi-hao, CHEN Bo, LI Shu-wei, YIN Feng Analysis and Optimization of Coordination Control System for Ultra Supercritical Power Generation Unit, *DEStech Transactions on Environment, Energy and Earth Sciences 2017 (ICEPEE 2017)*, 2017, pp. 349–352. DOI 10.12783/dteees/icepe2017/11864
17. Miroshnik, I.V. Consistent control by multi-channel systems. Leningrad, Energoatomizdat, 1990, 128 p. ISBN 5-283-04476-9.
18. Gurskiy A. A., Denisenko A.V., Goncharenko A. E. Deficiency on the ratio parameters in a control system as a parameter of turbo compressor plant functioning, *Refrigeration Engineering and Technology,* 2014, No. 4, pp. 58–64. ISSN 0453-8307
19. Markus Elisha D., Yskander Hamam, Agee John T., Adisa Jimoh A. Coordination control of robot manipulators using flat outputs, *Robotics and Autonomous Systems,* 2016, Vol. 83, pp 169–176. https://doi.org/10.1016/ j.robot.2016.05.006
20. Gan Yahui, Duan Jinjun, Chen Ming, Dai Xianzhong Multi-Robot Trajectory Planning and Posi-tion/Force Coordination Control in Complex Welding Tasks, *Applied Sciences,* 2019. 9(5), 924, P. 23. https://doi.org/10.3390/ app9050924

Received 09.01.2020.
Accepted 20.02.2020.

УДК 681.513

АЛГОРИТМИ НАСТРОЮВАННЯ КООРДИНУВАЛЬНИХ СИСТЕМ АВТОМАТИЧНОГО УПРАВЛІННЯ

Гурський О. О. – канд. техн. наук, доцент кафедри автоматизації технологічних процесів і робототехнічних систем інституту комп'ютерних систем і технологій «Індустрія 4.0» ім. П. Н. Платонова Одеської національної академії харчових технологій, Одеса, Україна.

Гончаренко О. Є. – канд. техн. наук, доцент кафедри автоматизації технологічних процесів і робототехнічних систем інституту комп'ютерних систем і технологій «Індустрія 4.0» ім. П. Н. Платонова Одеської національної академії харчових технологій, Одеса, Україна.

Дубна С. М. – старший викладач кафедри автоматизації технологічних процесів і робототехнічних систем інституту комп'ютерних систем і технологій «Індустрія 4.0» ім. П. Н. Платонова Одеської національної академії харчових технологій, Одеса, Україна.

АНОТАЦІЯ

Актуальність. Вирішена актуальна задача, що пов'язана з розробкою алгоритмів настроювання координувальних систем автоматичного управління. Важливість розробки даних алгоритмів викликана розвитком, у цей час, певного класу складних багаторівневих систем управління, що забезпечують узгодження перехідних процесів при регулюванні технологічних параметрів.

Мета роботи – мінімізація часу та автоматизація процесу настроювання багаторівневих координувальних систем автоматичного управління.

Метод. Запропоновано поетапне настроювання дворівневих координувальних систем автоматичного управління для об'єктів холодильної техніки, в окремому випадку для холодильних турбокомпресорних установок і систем з тунельними холодильними камерами. Наводяться блок-схеми алгоритмів, які можуть бути використані на етапі автоматизованого пошуку параметрів настроювання системи, що забезпечує узгодження перехідних процесів при автоматичному управлінні.

Результати. Експерименти були проведені в середовищі Matlab 2012a, за результатами яких були отримані графіки певних перехідних процесів на різних етапах настроювання багаторівневої системи автоматичного управління. На підставі аналізу результатів моделювання робиться висновок про доцільність використання різних алгоритмів настроювання.

Також була визначена галузь застосування розроблених алгоритмів поетапного настроювання багаторівневих систем. В окремому випадку були представлені особливості функціонування комплексу автоматизованого настроювання багаторівневих систем автоматичного управління.

Висновки. Проведені експерименти показали принципову придатність певних алгоритмів поетапного настроювання дворівневих координувальних систем автоматичного управління. Встановлено, що реалізація автоматизованого настроювання координувальних систем автоматичного управління із застосуванням відповідних алгоритмів має місце в галузі сучасних інтелектуальних технологій.

КЛЮЧОВІ СЛОВА: координація, узгодження процесів, регулювання співвідношення, алгоритми настроювання, мережі Петрі.

УДК 681.513

АЛГОРИТМЫ НАСТРОЙКИ КООРДИНИРУЮЩИХ СИСТЕМ АВТОМАТИЧЕСКОГО УПРАВЛЕНИЯ

Гурский А. А. – канд. техн. наук, доцент кафедры автоматизации технологических процессов и робототехнических систем института компьютерных систем и технологий «Индустрия 4.0» им. П. Н. Платонова Одесской национальной академии пищевых технологий, Одесса, Украина.

Гончаренко А. Е. – канд. техн. наук, доцент кафедры автоматизации технологических процессов и робототехнических систем института компьютерных систем и технологий «Индустрия 4.0» им. П. Н. Платонова Одесской национальной академии пищевых технологий, Одесса, Украина.

Дубна С. М. – старший преподаватель кафедры автоматизации технологических процессов и робототехнических систем института компьютерных систем и технологий «Индустрия 4.0» им. П. Н. Платонова Одесской национальной академии пищевых технологий, Одесса, Украина.

АННОТАЦИЯ

Актуальность. Решена актуальная задача, связанная с разработкой алгоритмов настройки координирующих систем автоматического управления. Важность разработки данных алгоритмов вызвана развитием, в настоящее время, определенного класса сложных многоуровневых систем управления, обеспечивающих согласование переходных процессов при регулировании технологических параметров.

Цель работы – минимизация времени и автоматизация процесса настройки многоуровневых координирующих систем автоматического управления.

Метод. Предложена поэтапная настройка двухуровневых координирующих систем автоматического управления для объектов холодильной техники. В частном случае для холодильных турбокомпрессорных установок и систем с туннельными холодильными

© Gurskiy A. A., Goncharenko A. E., Dubna S. M., 2020
DOI 10.15588/1607-3274-2020-1-19

камерами. Представляются блок-схемы алгоритмов, которые могут быть использованы на этапе автоматизированного поиска параметров настройки системы, обеспечивающей согласование переходных процессов при автоматическом управлении.

Результаты. Эксперименты были проведены в среде Matlab 2012a, в результате которых были получены графики определенных переходных процессов на различных этапах настройки многоуровневой системы автоматического управления. На основе анализа результатов моделирования делается вывод о целесообразности использования различных алгоритмов настройки.

Также была определена область применения разработанных алгоритмов поэтапной настройки многоуровневых систем. В частном случае были представлены особенности функционирования комплекса автоматизированной настройки многоуровневых систем автоматического управления.

Выводы. Проведенные эксперименты показали принципиальную пригодность определенных алгоритмов поэтапной настройки двухуровневых координирующих систем автоматического управления. Установлено, что реализация автоматизированной настройки координирующих систем автоматического управления с применением соответствующих алгоритмов имеет место в области современных интеллектуальных технологий.

КЛЮЧЕВЫЕ СЛОВА: координация, согласование процессов, регулирование соотношения, алгоритмы настройки, сети Петри.

ЛІТЕРАТУРА / ЛИТЕРАТУРА

1. Boichuk L. M. Controlling a Long String of Moving Vehicles via Dynamic Coordination Technique / L. M. Boichuk, G. I. Kratov, V. P. Dykhanov // IFAC Proceedings Volumes. – 1995. – T. 28, № 10. – P. 165–168. DOI: https://doi.org/10.1016/S1474-6670(17)51511-6
2. Boichuk, L. M. Synthesis of coordinated systems of automatic control [Sintez koordinirujushhih sistem avtomaticheskogo upravlenija] / L. M. Boichuk – Moscow, Energoatomizdat, 1991. – 160 p. ISBN 5–283– 01521–1
3. Filimonov A. B. The issues of synthesis for coordinating automatic control systems [O problematike sinteza koordiniruyuschih sistem avtomaticheskogo upravleniya] / A. B. Filimonov, N. B. Filimonov // Izvestiya SfedU, Engineering sciences. – 2012. – Vol. 3. – P. 172–180. ISSN 1999–9429 2311–3103
4. Gurskiy A. Systems of refrigerating centrifugal compressors capacity automatic control [Sıstemy avtomatıcheskogo regýlırovanııa proızvodıtelnostı holodılnyh tsentrobejnyh kompressorov] / A. Gurskiy, V. Denisenko, A. Goncharenko // Refrigeration Engineering and Technology. – 2013. – No. 5. – P. 72–76. ISSN 0453-8307
5. Dubna S. M. The working out of algorithms in control of the cooling processes of products in the tunnel cameras [Razrabotka algorıtmov ýpravlenııa protsessamı ohlajdenııa prodýktov v týnnelnyh kamerah] / S. M. Dubna, A. A. Gurskiy, A. E. Goncharenko, // Refrigeration Engineering and Technology. – 2018. – No. 5. – P. 72–76. ISSN 0453-8307
6. Romanenko V. D. The design of coordinating control algorithm for the thermal mixing aggregate under external disturbances [Razrabotka sistemi koordiniruyuschego cifrovogo upravleniya termosmesitelnoi ustanovkoi pri deistvii vneshnego vozmuscheniya] / V. D. Romanenko, Yu. L. Milyavsky // Research Bulletin of NTUU “Kyiv Polytechnic Institute”. – 2011. – No. 1. – P. 84–89. ISSN 1810-0546
7. Romanenko V. D. Multivariate object coordinating control with multirate sampling in stochastic environment [Koordinuyuche keruvannya bagatovimirnim ob’єktom iz riznotempovoyu diskretizacієyu v stohastichnomu seredovischi] / V. D. Romanenko, Yu. L. Milyavsky // System research & information technologies. – 2011. – No 2. – P. 7–20. ISSN 2308-8893
8. Tsybulkin G. A. Two-level coordinating control of a manipulation robot with kinematic redundancy [Dvýhýrovnevoe koordınırýıýee ýpravlenıe manıpýlıatsıonnym robotom s kınematıcheskoı ızbytochnostıý] / G. A. Tsybulkin // Problems of Control and Informatics. – 1995. – No. 3. – P. 143–150. ISSN 0572-2691
9. Tsybulkin G. A. The corrective automatic control of trajectory [Korrektırýıýee ýpravlenıe traektornym dvıjenıem] / G. A. Tsybulkin. – Kiev, Stal, 2012. – 161 p. ISBN 978–617–676–011–5
10. Gurskiy A. A. Coordinating automatic control systems of the robot manipulator drivers [Koordınırýıýaıa sıstema avtomatıcheskogo ýpravlenııa prıvodamı robota-manıpýlıatora] / A. A. Gurskiy, A. E. Goncharenko, S. M. Dubna // Automation of technological and business processes. – 2018. – No. 4. – P.11–21. ISBN 2312–3125
11. Air/fuel ratio control in diesel-dual-fuel engine by varying throttle / [W. Chatlatanagulchai, S. Rhienprayoon, K. Yaovaja, K. Wannatong] // EGR valve, and total fuel. – SAE Technical Paper. – 2010. – Issue 2010-01-2200. DOI: https://doi.org/10.4271/2010-01-2200
12. Adaptive air-fuel ratio control scheme and its experimental validations for port-injected spark ignition engines / [Xiaohong Jiao, Jiangyan Zhang, Tielong Shen, Junichi Kako] // International Journal of Adaptive Control and Signal processing. – 2015. – Volume 29, Issue 1. – P. 41–63. DOI: 10.1002/acs.2456.
13. Wong H. Model predictive engine air-ratio control using online sequential relevance vector machine / Hang-cheong Wong, Pak-kin Wong, Chi-man Vong // Journal of Control Science and Engineering. – 2012. – Volume 2012. – P. 2. DOI:10.1155/2012/731825.
14. Decomposition in automatic generation of Petri nets for manufacturing system control and scheduling / [D. W. He, Strege B., Tolle H., Kusiak A.] // International Journal of Production Research – 2000. – Volume 38, Issue 6. – P. 1437–1457. DOI: 10.1080/002075400188942
15. Gurskiy A. A. Tuning of neural network during automatic synthesis of Petri nets (2018) [Nastroıka neıronnoı setı prı avtomatıcheskom sınteze seteı Petrı] / A. A. Gurskiy, S. M. Dubna // Automation of technological and business processes. – 2018. – No. 1. – P. 22–32. DOI: https://doi.org/10.15673/atbp.v10i1.877
16. ZENG Ting-jian Analysis and Optimization of Coordination Control System for Ultra Supercritical Power Generation Unit / [Ting-jian ZENG, Zhi-hao LUO, Bo CHEN et al.] // DEStech Transactions on Environment, Energy and Earth Sciences 2017 (ICEPEE 2017). – 2017. – P. 349–352. DOI 10.12783/dteees/icepe2017/11864
17. Miroshnik I. V. Consistent control by multi-channel systems [Soglasovannoe upravlenie mnogokanalnimi sistemami] / I. V. Miroshnik. – Leningrad, Energoatomizdat, 1990. – 128 p. – ISBN 5-283-04476-9.
18. Gurskiy A. Deficiency on the ratio parameters in a control system as a parameter of turbo compressor plant functioning [Nevyazka po sootnosheniyu parametrov v sisteme upravleniya kak pokazatel’ funkcionirovaniya turbokompressornoj ustanovki] / A. A. Gurskiy, A. V. Denisenko, A. E. Goncharenko // Refrigeration Engineering and Technology. – 2014. – No. 4. – P. 58–64. ISSN 0453-8307
19. Coordination control of robot manipulators using flat outputs / [Elisha D. Markus, Hamam Yskander, John T. Agee, Adisa A. Jimoh] // Robotics and Autonomous Systems. – 2016. – Vol. 83. – P. 169–176. https://doi.org/10.1016/ j.robot.2016.05.006
20. Multi-Robot Trajectory Planning and Posi-tion/Force Coordination Control in Complex Welding Tasks / [Yahui Gan, Jinjun Duan, Ming Chen, Xianzhong Dai] // Applied Sciences. – 2019. – 9(5), 924. – P. 23. https://doi.org/10.3390/ app9050924

© Gurskiy A. A., Goncharenko A. E., Dubna S. M., 2020
DOI 10.15588/1607-3274-2020-1-19