УДК 621.316.13

INCREASE THE EFFICIENCY OF IMPLEMENTATION AND INTERACTION OF DISTRIBUTED GENERATION WITH THE LOCAL ELECTRIC NETWORK

DANYLCHENKO D.O. Ph.D., Associate Professor, Associate Professor of the Department of Electrical Energy Transmission of the National Technical University "Kharkiv Polytechnic Institute", Kharkiv, Ukraine, e-mail: Dmytro.Danylchenko@khpi.edu.ua, ORCID: 0000-0001-7912-1849;

KUZNETSOV D.S. graduate student of the Department of Electrical Energy Transmission of the National Technical University "Kharkiv Polytechnic Institute", Kharkiv, Ukraine, e-mail: dmytro.kuznetsov@ieee.khpi.edu.ua, ORCID: 0009-0003-1543-7854;

Purpose. *There is a trend of transition from a purely centralized power supply to a combined one, the number of local decentralized sources of electricity directly in the distribution networks is increasing. Distribution electric networks are transformed into a network with features characteristic of a local electric system, which receives power both from its own distribution electric networks and from a centralized source. Renewable energy has a number of advantages, but there are also disadvantages. Among them - the complication of the operation of electric networks with the growth of the capacities of renewable sources of electricity installed in them and the instability of generation due to their natural dependence on meteorological conditions, if we talk about technical shortcomings, then this refers to the sinusoidal nature of voltages and currents and voltage deviations, ensuring the quality of electricity which directly depends on ensuring the balance of active and reactive power in the electrical system. The purpose of this article is to analyze the effectiveness of reactive power compensation devices as a tool for reducing the threshold of integration of distributed generation sources into the electrical networks of Ukraine. The task is to study the reduction of the integration threshold for distributed generation.*

Research methods. *Mathematical modeling of an electrical system with distributed generation elements and reactive power compensation devices. The influence of the operation of reactive power compensation devices on the parameters of the electric network is studied. Comparative analysis of network parameters and their change when implementing distributed generation together with and without reactive power compensation devices.*

The results obtained. *The obtained results show that the use of reactive power compensation devices makes it possible to increase the carrying capacity of operating power lines and transformers, which is especially important when most of the power system schemes where distributed generation is integrated are of radial type, i.e. it actually lowers the integration threshold for renewable generation in the electric network. A very important factor is that the introduction of reactive power compensation devices together with distributed generation solves the problem of stabilization and voltage loss in electric networks, and also improves the quality of electric energy.*

Scientific novelty. *The method of selecting reactive power compensators for distribution networks has been further developed, which differs from the existing ones by taking into account the presence of renewable energy sources of various types, which allows to increase the efficiency of the interaction of the local electric network with the renewable generation integrated in it.*

Practical value. *It consists in lowering the integration threshold of distributed generation sources into electric networks by introducing reactive power compensation devices together with them, which affects a number of technological parameters in the node - reduction of power and voltage losses, stabilization and control of voltage, improvement of electric power quality indicators.*

Keywords: sources of distributed generation; renewable energy; reactive power compensation devices; electrical network; losses; implementation.

I. INTRODUCTION

Under modern conditions, in many developed countries, the growth in demand for electricity is met thanks to the integration of renewable energy sources (RES) into the electric networks (EN) [1] – [2].

Over the past 10 years, the greatest growth in Ukraine has been observed in the field of solar and wind energy. Over the next 10 years [3], regardless of the variable nature of production, the total capacity of solar power plants (SPP) and wind power plants will be 25% of the capacity of all sources of electricity in Ukraine [4] – [5]. The term "sources of distributed generation" or "distributed generation" (DG) is used to describe electrical energy sources that are directly connected to the electrical network or connected to it by consumers.

It is necessary to continue improving the methods and means of managing the normal modes of the

© Danylchenko D.O., Kuznetsov D.S., 2024
DOI 10.15588/1607-6761-2024-2-2

electrical networks of Ukraine for the development of renewable sources of electricity. The integration of renewable energy sources into the power system has its advantages, but the connection of such sources to distribution electrical networks has a significant impact on power losses, the voltage level in the electrical network, as well as on the operation of relay protection and automation.

II. ANALYSIS OF RESEARCH AND PUBLICATIONS

The implementation of DG affects distribution EN and turns them into active elements of the power system. This leads to the need to make changes (or review and modernize) in the adoption of EN management, operation and planning strategies. At the same time, their influence can have both a positive and a negative character, therefore it is advisable to carefully analyze the issue of joining EN sources to distribution EN of Ukraine.

It is possible to single out the main directions of influence of DG on EN:

• influence of DG on losses of electrical energy in EM;

• influence of DG on voltage in EN;

• influence of DG on the quality of electric power;

• influence of DG on relay protection and automation;

• the impact of DG on the reliability of work and operation of EN;

The influence of DG on the loss of electrical energy in EN:

Installation of DG power sources in the distribution EN not far from the load can change the direction of power flows. At the same time, three situations should be distinguished regarding the nodal load and DG [6]:

1. The own load of each node in the EN is greater than or equal to the output power of the DG sources connected to this node.

2. There is at least one node in the EN where the output power of the DG sources is greater than the actual load of this node, but the total power of the DG sources of this EN is generally less than the total load.

3. In the EN there is at least one node where the output power of the DG is greater than the own load of this node and the total power of the DG sources of this EN as a whole is greater than the total load.

In the first case, installed DG sources in the EN will affect the reduction of power losses in the distribution EN.

In the second case, DG sources can permanently increase the power losses in some power transmission lines (PTL) of the distribution EM, but, in general, the total power losses in the EN are reduced.

In the third case, the total power losses of the entire distribution EN will be greater than before the installation of DG sources. At the same time, the situation when electric energy is transported in the reverse direction, i.e. from the EN "tail" to its main section, is quite unfortunate. This is due to the fact that the cross-section of power lines in distribution networks, as a rule, decreases from the main section of the power line to its end, and, as is known, the resistance of the power line and its losses depend on the cross-section of the wires. Also, different sources of DG operate with different cosφ and their output reactive power can vary from insignificant generation (gas turbine plants, etc.) to significant, on the scale of distribution EN, consumption (wind power plants, etc.), which also negatively affects the value of power losses in EN [7].

Thus, the installation of DG sources can both increase and decrease power losses in EN, which mainly depends on the location, power, level of introduction of DG sources in EM, their cosφ, as well as on the topology of EN, etc.

The influence of DG on the voltage in EN:

Two types of influence can be distinguished.

First, it is the effect on the voltage level in the steady-state EN operation mode [8]. In traditional distribution networks, that is, in EN radial type, voltage reduction occurs along the direction of electricity supply to consumers, from the main section of the transmission line to its end. After the installation of DG sources in such an EN, the load of the power feeder decreases, and the voltage along the transmission line may increase. In this case, the cosφ of the DG sources and the type of generator (synchronous or asynchronous) are important. In some cases, when using relatively powerful synchronous generators, the allowable voltage level may be exceeded (>1.1U). Thus, the magnitude of the voltage change depends on the installation locations of the DG sources, their power and cocφ (generation or consumption).

Secondly, the influence of DG on voltage fluctuations in EN [8]. In a traditional distribution EN, the active and reactive load of the nodes changes with time, which causes certain fluctuations in the voltage level in the EN. In the direction from the main section to the end of the power line, the voltage fluctuations, as a rule, increase. If the load is concentrated mainly near the end of the transmission line, the voltage level will fluctuate more intensively. After connecting the DG sources to the distribution EN, the latter will affect the fluctuations of the voltage levels in the nodes, increasing or decreasing them. In the case when the DG sources work in coordination with the local load, that is, their power increases (decreases) when the load in the nodes increases (decreases), they will dampen voltage fluctuations. But, when DG sources work inconsistently with the local load, since the power of DG sources depends on primary resources and the initial characteristics of which are difficult to control (such as wind speed, intensity of sunlight radiation, etc.), then in such a situation, DG can significantly increase voltage fluctuations in EN. In

addition, some DG sources (for example, WPP, photovoltaic elements) are characterized by a strong fluctuation of the output power, which significantly affects the fluctuation of voltage levels in the EN nodes, the effect is stronger, the greater the installed power of the DG sources.

The influence of DG on the quality of electrical energy:

The installation of DG sources in distribution EN has a rather significant effect on the quality of electrical energy [9] – [10].

First, DG sources lead to an increase in the flicker dose, which can occur when powerful DG sources are introduced or removed from operation in distribution EN, a sudden change in the output power of RG sources, interaction between DG sources and regulating devices.

Secondly, DG sources can generate high-order harmonics in EN, while DG sources can either themselves be sources of higher-order harmonics or are connected to the distribution EN through an inverter that generates higher-order harmonics in the network, which is typical for fuel and fotogalvanic elements, wind turbines, etc.

Thirdly, DG sources affect voltage dips, which is mostly related to the type of generator. For example, in the case of DG with synchronous generators, after a voltage drop, the latter is restored approximately to the initial level, and in the case of asynchronous generators, the voltage is not restored to the initial level due to a decrease in reactive power support [11]. It should also be noted that the total influence of DG sources on voltage dips depends on the DG power, but not strongly enough.

If we briefly summarize the above effects of DG on the loss of electrical energy, on the voltage and quality of electrical energy, then the use of reactive power compensation devices during the introduction of DG will make it possible to partially or completely solve these problems.

III. PURPOSE OF THE WORK

With the help of mathematical modeling and comparative analysis, the parameters of the local electric network into which distributed generation is integrated with and without reactive energy compensation devices are investigated. The ability of the reactive energy compensation device to increase the efficiency of the interaction of the local electric network with distributed generation and to lower the integration threshold for it is determined.

The main problems of the technical aspects of the implementation of distributed generation and how reactive power compensation devices can affect or eliminate these problems are given.

IV. PRESENTATION OF THE BASIC MATERIAL AND ANALYSIS OF THE RESULTS OBTAINED

Basically, compensation of reactive electricity is used for:

• reduction of active e/e losses in feeder lines;

• unloading power equipment from reactive power flowing through it;

• reduction of payments for reactive electricity;

• increase in voltage.

To reduce reactive power flows along lines and transformers, sources of reactive power should be located near the places of its consumption. At the same time, the transmission elements of the network are unloaded from reactive power, which reduces losses of active power and voltage.

The use of reactive power compensation devices must be preceded by a thorough technical and economic analysis due to the high cost and sufficient complexity of these devices.

The methods of using compensating devices, depending on their location in the electric power system, are divided into the following types: individual, group, centralized.

With individual compensation, capacitors (capacitor) are connected directly to the place of generation of reactive power, i.e. own capacitor (s) - to an asynchronous motor, individual - to a welding machine, personal capacitor - for an induction furnace, for a transformer, etc. In this way, the power wires suitable for a specific consumer are unloaded from reactive currents. Figure 1 shows the scheme of individual compensation.

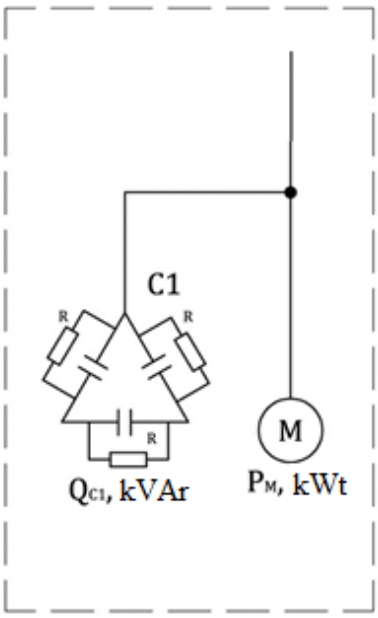

Figure 1. Scheme of individual compensation

Group compensation - refers to the connection of one common capacitor or a common group of capacitors at once to several consumers with significant inductive components.

The line feeding this group of consumers will be unloaded from reactive power. Figure 2 shows the scheme of group compensation.

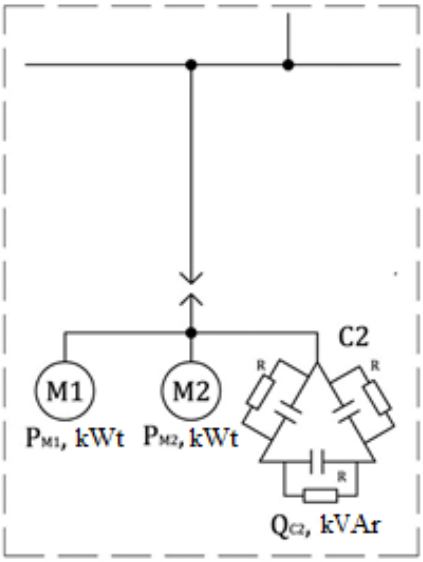

Figure 2. Scheme of group compensation

Centralized compensation involves the installation of capacitors with a regulator in the main or group distribution board. The regulator evaluates the current consumption of reactive power in real time, and quickly connects and disconnects the required number of capacitors. As a result, the total power consumed from the network is always minimized in accordance with the instantaneous value of the required reactive power. Figure 3 shows the scheme of centralized compensation.

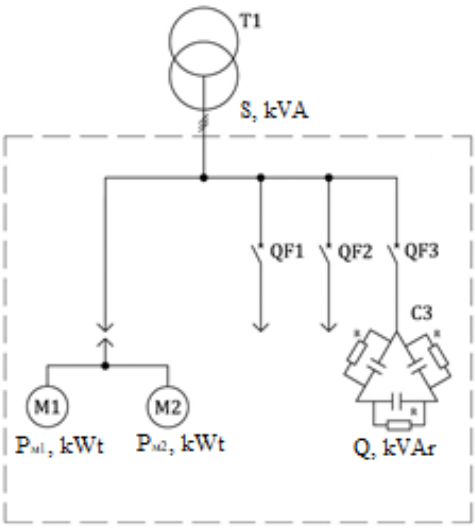

Figure 3. Scheme of centralized compensation

The main modern reactive power compensation devices include capacitor units (0.4-10kV) and STATKOM (6-35kV and above)

Condenser units are of 2 types:

• Regulated (automatic) capacitor units (ACU);

• Non-regulated (non-automatic) condensing units (NCU);

Regulated (automatic) capacitor units (ACU) mean that the reactive power in the network is regulated using a microprocessor regulator, which, thanks to the signal from the current transformer at the input of the enterprise or distribution device, etc., supplies the command to close or open the stages of the capacitor unit that make up the battery.

The power of such an installation is calculated based on the analysis of the electricity consumption data of the enterprise or the power grid and is selected by the appropriate load levels. Generation of settings is disabled due to the settings of the regulator. A one-line diagram of such an installation is shown in Figure 4.

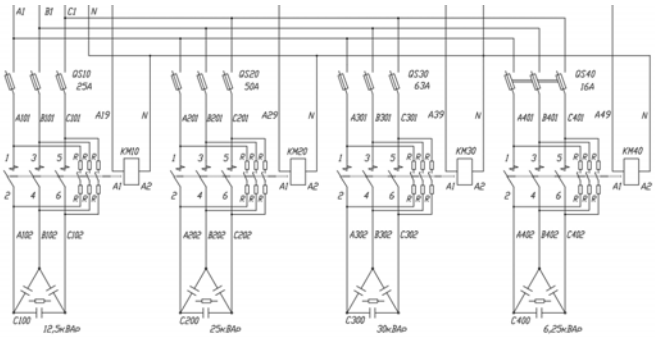

Figure 4. One-line scheme of AKU-0,4kV

The advantages include:

• automatically monitors the change in the reactive power of the load in the network and in accordance with the given value of cos φ;

• generation of reactive power to the network is excluded;

• all main parameters of the network are visually monitored;

• a system of emergency shutdown of the condenser installation and warning of service personnel is provided;

The switching time of one stage is no more than 3 minutes. If it is necessary to reduce the discharge time of capacitors, special discharge devices are used.

NCU are usually used in networks of 6 kV and above (but 0.4 kV is not an exception). The rated power is also set by stages from capacitors, but unlike the ACU, all stages are turned on at once or stage switching is possible only in manual mode. The regulator is absent, or it may be, but it is used only as a protection unit for the capacitor unit.

Such installations have a number of advantages and disadvantages compared to the 6kV battery, the advantages include:

• lower cost than ACU, due to the absence of vacuum contactors and protective devices assigned to them;

• the service life of capacitors is longer, therefore there are no frequent commutations and accompanying peak shock currents up to 100 x Inom;

• ease of operation due to the absence of mechanical moving parts;

• lower operating costs;

• no need for constant control;

• regulation and prevention of switching devices by personnel;

• smaller dimensions of the installation in comparison with ACU

As for the disadvantages, the most important of them is the possible generation of reactive power in the energy system, which will cause serious problems.

Figure 5 shows the structural diagram of the 10 kV NCU.

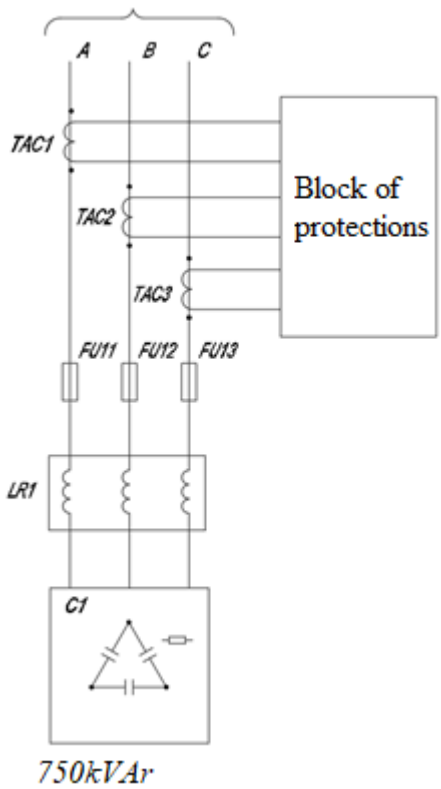

Figure 5. Structural diagram of the 10 kV NCU

STATKOM (static synchronous compensator) is a fast-acting device capable of emitting or absorbing reactive current and thus regulating the voltage at the point of connection to the power grid.

It is classified as a flexible alternating current transmission system (FACTS). The technology is based on the "Voltage Source Converter" (voltage source converter) with semiconductor gates in a modular multi-level configuration [12].

The main schematic configuration of STATKOM includes a set of filters of higher harmonics of filter-compensating circuits, which are permanently connected to the network or switched by switches, and included in parallel with them in a triangle of three phases of thyristor-controlled reactors - thyristor reactor group (TRG) Figure 6.

The firing angle of thyristors TRG can be quickly changed so that the current in the reactor monitors the load current or the reactive power in the power system.

The STATKOM control and protection system provides quick compensation of the reactive power of the load and maintenance of the adjustable parameter in accordance with the set point, performs protection of the STATKOM equipment, control and signaling of failures and can be modified for specific EM requirements.

The response time of the STATKOM control system to a change in the regulated parameter is 5 ms for arc steel furnace type loads and 25-100 ms for general industrial loads of network substations.

STATCOM has a level of automation that ensures its operation without the constant presence of personnel. STATKOM is controlled from a remote control panel or from an automatic technological process control system through an external interface.

The nominal power and STATKOM scheme is selected for a specific object depending on the parameters of the power supply system, the type and power of the compensated load, and the requirements for the quality of electricity and the functions performed. For each individual case, the non-circulating power of the TRG and filter-compensating circuits is calculated and their composition is determined.

As already mentioned above, the massive production of photovoltaic energy connected to the network creates many problems, such as voltage stability, compensation of reactive power of local loads, operational reliability, etc.

In order to implement the compensation of the reactive power of local loads, reduce the loss of electrical energy and improve the controllability of the photovoltaic system, it is proposed to consider the option of installing STATKOM 35kV together with SPP.

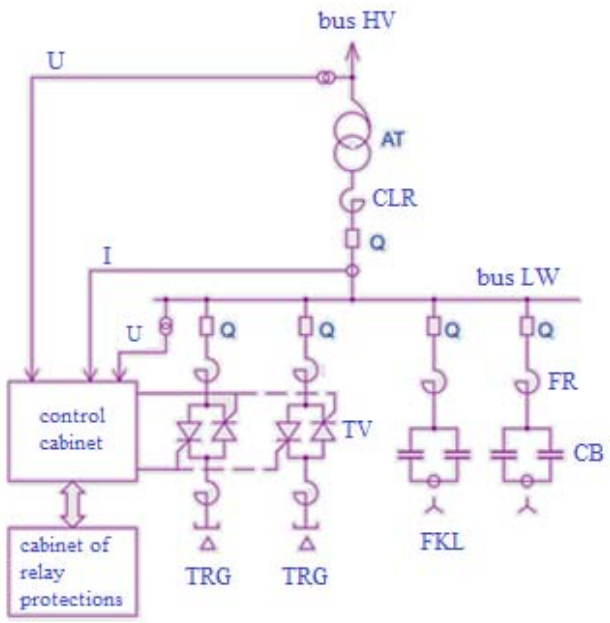

Figure 6. An example of execution of STATKOM 35kV

(AT – autotransformer; CLR – current-limiting reactor; Q – switch; FR – filter reactor; TV – thyristor valve; TRG – thyristor-reactor group; FKC – filter compensating circuit; CB – capacitor bank)

In DSTU 8635:2016 [13], there are requirements for voltage magnitude, quality of electrical energy and regulation of reactive power of SPP, namely:

• Permissible frequency and voltage ranges of electricity produced by a photovoltaic plant (FPP) must meet the requirements for frequency and voltage levels in normal and emergency modes of operation of the power system in accordance with GOST 13109 and DSTU EN 50160:2023. At the same time, the generation capacity of the FPP should be reduced by the minimum possible amount;

• Indicators of the quality of electric energy produced by the FPP at the connection point must meet the requirements for the quality of electricity in accordance with GOST 13109 and DSTU EN 50160:2023;

• If necessary, the FPP should be equipped with appropriate high-speed means of compensation of reactive power with filters of higher harmonics. The compliance of FPP equipment with the requirements for the quality of electric energy must be confirmed by modeling and/or experimentally;

• The photovoltaic plant must be equipped with reactive power regulation functions. The current settings of the parameters for regulating the reactive power and voltage must be determined before putting the FPP into operation by the owner of the electric networks (and, if necessary, by the system operator);

• The photovoltaic plant must be able to fix power factor settings with an accuracy of 0.001 kVA. If the power factor setting for a FPP with a capacity of more than 25 MW is changed, then such changes must be accepted within 2 seconds and take effect no later than 30 seconds after receiving the order to change the setting. The error of the performed adjustment and set settings should not exceed ± 2% of the setpoint value or ± 0.5% of the nominal power, depending on which of the criteria is stricter.

Therefore, based on the above-mentioned State Standard of Ukraine, the introduction of reactive power compensation devices is a necessity for the normal functioning of the SPP and its integration into the EN.

Let's consider how the parameters of the normal EN mode (Figure 7) will change when STATKOM 35 kV 6.5 MVAr is implemented (the power is chosen to cover the local reactive consumption) together with a 20 MW SPP in one of the districts of Odesa Region (Figure 8).

For modeling, the maximum instantaneous values from the summer measurements of electrical energy were taken.

The SPP generates a power of 20MW, this power fully covers the node's active energy needs, and the rest of the electrical energy from the SPP goes to the balancing node in EN through the lines from substation 4.

This option is not the best from a technical and economic point of view, because the generated electrical energy does not remain in the node, but its remains go through the 35kV feeder lines to the EN balancing node.

As can be seen from the simulation in Figures 9 and 10, the flow of current in the feeder power lines is significantly reduced, and therefore the losses of electrical energy are reduced, the lines are unloaded and the voltage on the substations, which are closer to the balancing node, is increased.

This greatly affects the technical and economic efficiency of the joint operation of EN and RES.

In addition, as is known from [14] – [16], SPP inverters are sources of harmonic distortions, therefore STATKOM performs an additional function of a harmonic filter, thereby improving power quality indicators.

Also, according to the simulation results in [17], it can be stated that STATKOM is one of the effective tools for solving problems with voltage deviation.

As an example, STATCOM is installed at such facilities - SVG-STATCOM 35 kV 4x8 MVAr, FC 35 kV 4x5 MVAr for Pokrovska SPP LLC (DTEK VDE LLC).

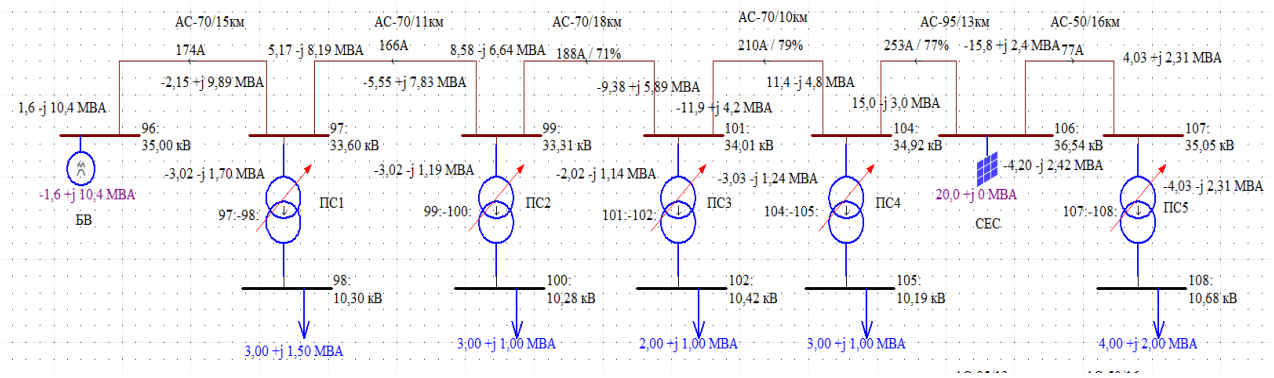

Figure 7. Scheme of the normal regime before the introduction of STATKOM

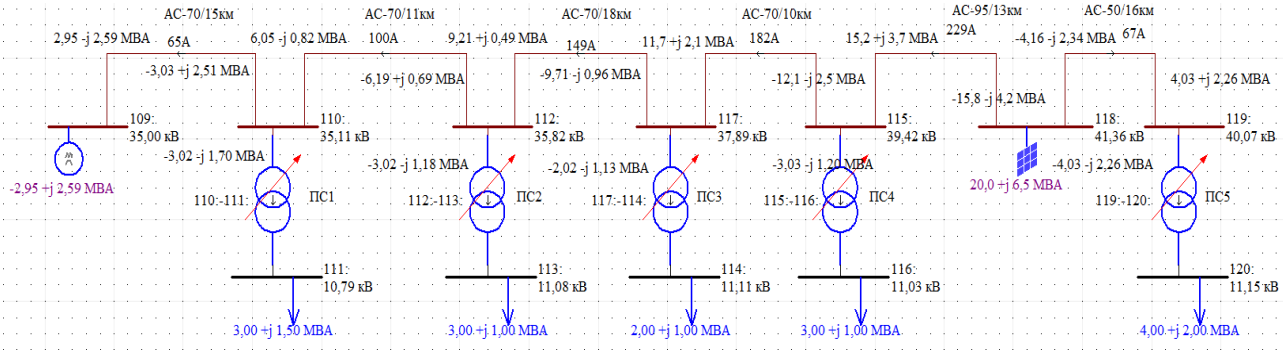

Figure 8. Scheme of normal mode after implementation of STATKOMCTATKOM

U кВ	фаза град	P МВт	Q Мвар	Pг МВт	Qг Мвар	Назва вузла
35.000	0.0	0.000	-0.000	-1.576	10.424	96:
33.601	3.7	0.000	-0.000	0.000	-0.000	97:
10.303	1.5	3.000	1.500	0.000	0.000	98:
33.309	6.7	0.000	-0.000	0.000	-0.000	99:
10.280	4.5	3.000	1.000	0.000	0.000	100:
10.417	10.1	2.000	1.000	0.000	0.000	102:
34.924	15.5	0.000	-0.000	0.000	-0.000	104:
10.192	12.3	3.000	1.000	0.000	0.000	105:
34.013	12.3	0.000	-0.000	0.000	-0.000	101:
36.542	18.1	0.000	-0.000	20.000	-0.000	106:
35.049	18.0	0.000	-0.000	0.000	-0.000	107:
10.682	15.3	4.000	2.000	0.000	0.000	108:

Струм А	Pпоч МВт	Qпоч Мвар	Pкін МВт	Qкін Мвар	Pнх МВт	Qнх Мвар	Назва вітки
188	-3.024	-1.704	3.000	1.500	0.008	0.052	97:-98:
174	1.576	-10.424	-2.148	9.890	0.000	0.000	96:-97:
178	-3.022	-1.187	3.000	1.000	0.008	0.051	99:-100:
166	5.171	-8.186	-5.555	7.828	0.000	0.000	97:-99:
124	-2.018	-1.142	2.000	1.000	0.006	0.038	101:-102:
179	-3.029	-1.238	3.000	1.000	0.007	0.040	104:-105:
210	11.396	-4.752	-11.950	4.235	0.000	0.000	101:-104:
188	8.577	-6.641	-9.378	5.893	0.000	-0.000	99:-101:
253	14.979	-2.998	-15.799	2.416	0.000	0.000	104:-106:
242	-4.034	-2.308	4.000	2.000	0.009	0.057	107:-108:
77	-4.201	-2.416	4.034	2.308	0.000	0.000	106:-107:

Сумарне генерування	18.424	10.424
Сумарне генерування PV	20.000	-0.000
Сумарне навантаження	15.000	6.500
Втрати поздовжні	3.385	3.686
Втрати поперечні	0.039	0.238
Сумарний небаланс	0.000	-0.000

Figure 9. Network parameters before the introduction of STATKOM

U кВ	фаза град	P МВт	Q Мвар	Pг МВт	Qг Мвар	Назва вузла
35.000	0.0	0.000	-0.000	-2.945	2.588	109:
35.108	1.6	0.000	-0.000	0.000	-0.000	110:
10.789	-0.4	3.000	1.500	0.000	0.000	111:
35.814	2.9	0.000	-0.000	0.000	-0.000	112:
11.082	1.0	3.000	1.000	0.000	0.000	113:
11.667	3.8	2.000	1.000	0.000	0.000	114:
39.419	6.9	0.000	-0.000	0.000	-0.000	115:
11.577	4.5	3.000	1.000	0.000	0.000	116:
37.892	5.5	0.000	-0.000	0.000	-0.000	117:
41.361	8.0	0.000	-0.000	19.996	6.498	118:
40.063	7.9	0.000	-0.000	0.000	-0.000	119:
12.304	5.9	4.000	2.000	0.000	0.000	120:

Струм А	Pпоч МВт	Qпоч Мвар	Pкін МВт	Qкін Мвар	Pнх МВт	Qнх Мвар	Назва вітки
179	-3.023	-1.696	3.000	1.500	0.009	0.057	110:-111:
65	2.945	-2.588	-3.024	2.514	0.000	0.000	109:-110:
165	-3.021	-1.176	3.000	1.000	0.010	0.059	112:-113:
100	6.047	-0.819	-6.186	0.688	0.000	0.000	110:-112:
111	-2.017	-1.130	2.000	1.000	0.008	0.047	117:-114:
158	-3.026	-1.204	3.000	1.000	0.008	0.051	115:-116:
181	11.726	2.085	-12.141	-2.472	0.000	0.000	117:-115:
149	9.208	0.488	-9.709	-0.955	-0.000	0.000	112:-117:
229	15.167	3.676	-15.839	-4.153	0.000	0.000	115:-118:
210	-4.031	-2.264	4.000	2.000	0.012	0.074	119:-120:
67	-4.157	-2.345	4.031	2.264	0.000	0.000	118:-119:

Сумарне генерування	17.052	9.086
Сумарне генерування PV	19.996	6.498
Сумарне навантаження	15.001	6.500
Втрати поздовжні	2.004	2.298
Втрати поперечні	0.047	0.288
Сумарний небаланс	-0.000	0.000

Figure 10. Network parameters after the implementation of STATKOM

V. CONCLUSIONS

The installation of STATKOM 6.5 MVAr helped to relieve the power grid lines by 109 A, and in percentage terms to reduce the load on the lines:

Table 1. Reduction of line load

Line name	BV-PS1	PS1-PS2	PS2-PS3	PS3-PS4	PS4-SPP	SPP-PS5
Before, %	65,6	62,8	70,9	79,1	76,5	36,5
After, %	24,4	37,9	56,1	68,5	69,3	31,7
Difference, %	41,2	24,9	14,8	10,6	7,2	4,8

Citing [18] - the company "DTEK VDE" completed the process of additional adjustment of reactive power compensation devices (Statcom) at its enterprises, designed to solve the issue of low-frequency oscillation damping (POD - power oscillation damping) in the UES network of Ukraine, which was one from the conditions of its synchronization with ENTSO-E, as well as the implementation of Statcom, this will contribute to the expansion of Ukraine's export opportunities in the ENTSO-E network by 730 MW (currently, the technical possibility for export from the united within the framework of integration with ENTSO-E systems of Ukraine/Moldova to Europe is 400 MW).

This indicates a real perspective of the implementation of STATKOM for EN of Ukraine

Therefore, the use of controlled reactive power compensation devices:

• will allow to increase the carrying capacity of existing power lines and transformers [19] – [20];

• will reduce the loss of electrical energy, which is very expensive in monetary terms;

• will solve the problem with stabilization or loss of voltage in EN;

• will improve power quality indicators.

All of the above contributes to the acceleration of the integration of RES into the EN of Ukraine, especially when most of the EM schemes where RES is integrated are of the radial type.

REFERENCES

[1] Swart, R.J., Coppens, C., Gordijn, H. (2009). Europe's onshore and offshore wind energy potential: An assessment of environmental and economic constraints. European Environment Agency, 90. DOI: 10.2800/11373

[2] International Energy Agency. (2010). Technology Roadmap Solar photovoltaic energy. International Energy Agency, 48. DOI: 10.1787/9789264088047

[3] Yandulskyi, O.S., Trunin, G.O. (2013). Approaches to the optimal management of the modes of distribution electric networks with distributed generation. Bulletin of the Vinnytsia Polytechnic Institute, 62-64.

[4] Trunin, G.O. (2014). Zones of effective voltage regulation by distributed generation sources with inverter connection in the distribution network. Technical electrodynamics, 50-52.

[5] Yandulskyi, O.S., Trunin, G.O. (2015). An approach to optimal voltage regulation in the distribution electric network with a source of distributed generation, taking into account their ownership to one or different owners. Bulletin of the Azov State Technical University. Technical sciences, 121-129.

[6] Ackerman, T., Knyazkin, V. (2000). Interaction between distributed generation and the distribution network. Transmission and Distribution Conference and Exhibition: Asia Pacific IEEE/PES, 1357—1362.

[7] Ackermann, T. (2007). Distributed resources and re-regulated electricity markets. Electric Power Systems Research, 1148-1159. DOI: 10.1016/j.epsr.2006.08.006

[8] Wang, S. (2009). Distributed generation and its effect on distribution network system. Electricity Distribution - Part 1. 20th International Conference and Exhibition, 1-4. DOI: 10.1049/cp.2009.0560

[9] Dolezal, L., Sautarius, R., Tlusty, J. (2003). The effect on dispersed generation op power quality in distribution system. Quality and Security of Electric Power Delivery Systems. CIGRE/IEEE PES International Symposium, 204-207.

[10] Esposito, G., Golovanov, N., Lazaroiu, C., Zaninelli, D. (2007). Impact of Embedded Generation on the Voltage Quality of Distribution Networks. Electrical Power Quality and Utilization, EPQU, 1-6.

[11] Baggini, A.B. (2008). Handbook of Power Quality. Chichester, England; Hoboken, NJ: John Wiley & Sons, 642.

[12] Singh, B., Saha, R., Chandra, A., Al-Haddad, K. (2009). Static synchronous compensators (STATCOM). IET Power Electronics, 297-324.

[13] DRSTU 8635:2016. (2016). Solar energy. Sites for photovoltaic stations. Connection of stations to the electric power system: chynnyy z 2016.04.05. Institute of Renewable Energy of the National Academy of Sciences of Ukraine, 22.

[14] Lezhnyuk, P.D. (2015). The influence of SES inverters on the indicators of the quality of electric energy. Bulletin of the Khmelnytskyi National Technical University. Series: Technical sciences, 134-139.

[15] Enslin, J. (2004). Harmonic interaction between a large number of distributed power inverters and the distribution network. IEEE Transactions on power electronics, 1586-1593.

[16] Bordakov, M. M. (2019). Compensation of reactive power by a solar power plant and the effect of this

process on the operation of the central electric network. Renewable energy, 31– 35.

[17] Zakharov, A. M. (2014). Reduction of voltage deviations at the points of connection of powerful solar power plants to electrical networks. Technical electrodynamics, 44-46.

[18] Article on implementation [Electronic resource] // Interfax. – 2023. - Resource access mode: https://interfax.com.ua/news/greendeal/938512.html.

[19] Danylchenko, D.O., Kuznetsov, D.S. (2022). Use of reactive power compensation devices at stations with renewable energy sources. ISSN 2222-2944. Information technologies: science, engineering, technology, education, health, 70.

[20] Shevchenko, S., Danylchenko, D., Kuznetsov, D., Petrov, S. (2021). Use of Capacitor Batteries to Improve the Quality of Electrical Energy. IEEE 2nd KhPI Week on Advanced Technology (KhPIWeek), 666 – 669 .

ПІДВИЩЕННЯ ЕФЕКТИВНОСТІ ВПРОВАДЖЕННЯ ТА ВЗАЄМОДІЇ РОЗПОДІЛЕНОЇ ГЕНЕРАЦІЇ З ЛОКАЛЬНОЮ ЕЛЕКТРИЧНОЮ МЕРЕЖЕЮ

ДАНИЛЬЧЕНКО Д.О. канд. техн. наук, доцент, доцент кафедри передачі електричної енергії Національного університету «Харківський політехнічний інститут», Харків, Україна, e-mail: dmytro.danylchenko@khpi.edu.ua, ORCID: 0000-0001-7912-1849;

КУЗНЕЦОВ Д.С. аспірант кафедри передачі електричної енергії Національного технічного університету «Харківський політехнічний інститут», Харків, Україна, e-mail: dmytro.kuznetsov@ieee.khpi.edu.ua, ORCID: 0009-0003-1543-7854;

Мета роботи. *Спостерігається тенденція переходу від чисто централізованого електропостачання до комбінованого, зростає кількість місцевих розосереджених джерел електроенергії безпосередньо в розподільних електричних мережах. Розподільчі електричні мережі перетворюються в мережу з ознаками, характерними для локальної електричної системи, яка отримує живлення як від власних розподільчих електричних мереж, так і від централізованого джерела. Відновлювальна енергетика має ряд переваг, однак є і недоліки. Серед них - ускладнення функціонування електричних мереж при зростанні в них встановлених потужностей відновлюваних джерел електроенергії та нестабільність генерування через природну їх залежність від метеорологічних умов, якщо про технічні недоліки то це стосується - синусоїдності напруг і струмів та відхилень напруги, забезпечення якості електроенергії яке напряму залежить від забезпечення балансу по активній та реактивній потужності в електричній системі. Метою цієї статті є аналіз ефективності роботи пристроїв компенсації реактивної потужності як інструменту для зниження порогу інтеграції джерел розподіленої генерації в електричні мережі України. Завдання полягає в дослідженні зниження інтеграційного порогу для розподіленої генерації.*

Методи дослідження. *Математичне моделювання електричної системи з елементами розподіленої генерації та пристроями компенсації реактивної потужності. Досліджується вплив роботи пристроїв компенсації реактивної потужності на параметри електричної мережі. Порівняльний аналіз параметрів мережі та їх зміна при впровадженні розподіленої генерації разом з пристроями компенсації реактивної потужності та без них.*

Отримані результати. *Отримані результати показують, що застосування пристроїв компенсації реактивної потужності дозволяє підвищити пропускну спроможність діючих ліній електропередач і трансформаторів, що особливо ціно коли більшість схем електромережі куди інтегрується розподілена генерація має радіальний тип, тобто, фактично знижує інтеграційний поріг для відновлювальної генерації в електричні мережі. Немало важливим фактором є те що, впровадження пристроїв компенсації реактивної потужності разом з розподіленою генерацією вирішує проблему зі стабілізацією та втратою напруги в електричних мережах, а також покращує показники якості електричної енергії.*

Наукова новизна. *Отримав подальший розвиток метод вибору компенсаторів реактивної потужності для розподільчих мереж, що відрізняється від існуючих врахуванням наявності відновлюваних джерел енергії різних типів, що дозволяє підвищити ефективності взаємодії локальної електричної мережі з інтегрованою до неї відновлювальною генерацією.*

Практична цінність. *Полягає в зниженні інтеграційного порогу в електричні мережі джерел розподіленої генерації, за рахунок впровадження разом з ними пристроїв компенсації реактивної потужності, що впливає на ряд технологічних параметрів в вузлі - зниження втрат потужності та напруги, стабілізація та управління напругою, покращення показників якості електричної енергії.*

Ключові слова: джерела розподіленої генерації; відновлювальна енергетика; пристрої компенсації реактивної потужності; електрична мережа; втрати; впровадження.