UDC621.316.13

IMPROVING THE PROTECTIVE PROPERTIES OF ELECTRICAL EQUIPMENT IN LOW-VOLTAGE CABINETS OF COMPLETE TRANSFORMER SUBSTATIONS AUXILIARIES NPP

SEREDA O.G. Sci.D, Associate professor, Professor of the electrical apparatuses department of the National Technical University "Kharkiv Polytechnic Institute", Kharkiv, Ukraine, ORCID: https://orcid.org/0009-0003-5243-3828, e-mail: oleksandr.sereda@khpi.edu.ua;

ZHORNIAK L.B. Ph.D, Associate professor, Associate professor of the electrical and electronic apparatuses department of the National University ”Zaporizhzhia Polytechnic”, Zaporizhzhya, Ukraine, ORCID: https://orcid.org/0000-0002-1417-4859, e-mail: zproton@zp.edu.ua;

SEREDA O.G. Ph.D, Associate professor, Associate professor of the electrical apparatuses department of theNational Technical University "Kharkiv Polytechnic Institute", Kharkiv, Ukraine, ORCID: https://orcid.org/0000-0003-4658-9554, e-mail: olena.korol@khpi.edu.ua;

Purpose. *Analyze the existing problems in the relay-current protection system of electrical installations of 0.4 kV auxiliary substations of nuclear power plants, which do not allow the implementing the "long-range backup" mode, as well as to increase the sensitivity of relay protection devices to remote short-circuit currents by using additional criteria for identifying emergency modes in order to ensure selectivity and protection against remote redundancy failures.*

Methodology. *Method of system analysis and synthesis, as well as the theory of electromagnetic transient processes in electric power systems for diagnostics of emergency modesof operation of distribution electrical circuits.*

Findings. *The article shows the need and provides scientific and technical justification for proposals to modernize relay-current protection systems for 0.4 kV electrical installations using digital technologies to implement the requirements of "long-range backup". A scientifically sound technical solution is provided for upgrading circuit breakers using microprocessor protection devices, the output circuits of which affect independent electromagnetic tripping devices of these circuit breakers. This solution allows for an in-depth analysis of processes in electrical circuits and the implementation of "long-range backup" by building high-speed selective protection and increasing the sensitivity of the protection to short-circuit currents. As a result of modernization of electrical installations of 0.4 kV NPP auxiliary substations due to implementation of new types of relay-current protection, the following is possible: significant reduction of protection response time at all stages between the source and receiver of electric power, both in the normal mode and in the "long-range backup" mode, and, accordingly, significant reduction of thermal effects on elements of electrical installations both from the flowing short-circuit current and from the effect of an electric arc; significant increase in sensitivity of protection to remote short-circuit currents, which will eliminate both cases of possible protection failure and its false operation. After modernization of the entire protection system due to the use of microprocessor protection devices, the existing structure of the protection system will be completely preserved without replacing switches of all stages, which will allow significant savings in time and financial costs compared to other modernization options.*

Originality *The article presents a technical solution for upgrading circuit breakers with microprocessor protection devices, in which the output circuits act on independent electromagnetic releasing mechanismsof these devices.*

Practical value.*The development allows increasing the reliability of emergency protection automation, as well as fire safety of auxiliary substations of nuclear power plants with a voltage of 0.4 kV.*

Keywords: circuit breaker; reliability; microprocessor protection device; long-range backup; microprocessor release unit; remote backup; operate time.

I. INTRODUTION

Uninterrupted operation of electrical equipment is possible only with the presence of protective devices that respond to disruptions in the normal operation of electrical installations and promptly disconnect damaged elements from undamaged ones. Circuit breakers, widely used both in urban power grids and in electrical installations of industrial enterprises, serve these purposes. The high sensitivity of circuit breakers allows detecting emergency modes at an early stage of occurrence, limiting emergency current, thermal, electrodynamic and other undesirable types of impact to a minimum. This ensures the integrity of the power system, minimizes the consequences of an accident - unacceptable downtime of electrical equipment, violations of the technological cycle, etc.

Increasing the reliability of protection of 0.4 kV electrical networks is considered a pressing issue due to the fact that automatic circuit breakers in operation and installed in existing networks, in most cases, do not meet

© Sereda O.G., Zhorniak L.B., Sereda O.G., 2025
Creative Commons Attribution-ShareAlike 4.0International License**(CC-BY-CA 4.0)**
DOI: https://doi.org/10.15588/1607-6761-2025-2-4

modern reliability requirements both in terms of the number of implemented protections and in terms of failure-free operation indicators. Expanding the protective functions and increasing reliability is possible due to new promising technologies, which include microprocessor devices used for extended analysis of emergency processes during the distribution of nuclear power plant (NPP) capacity across the main power flows of the country's energy systems [1] – [3].

Such analysis allows moving from simple criteria for protection operation, such as instantaneous current value, to more complex integrated criteria that combine several parameters of the electric circuit: power factor, asymmetry and nonlinear distortions of phase currents, type of excitation current, etc. Integrated criteria created in real time allow timely identification of the type of emergency situation and determination of the protection operation algorithm. For NPP electrical equipment in general and, in particular, for substation auxiliary electrical installations (AEI) with a voltage of 0,4 kV, the most relevant is to increase the reliability indicators of protection and, due to this, reduce the probability of fire in such installations, which, in turn, leads to the adoption of more stringent requirements for their protection systems [4] – [6].Electrical installation elements (such as cables and buses) must be protected in the event of failure of the circuit breaker to the output terminals of which they are connected.To realize this requirement, called "long-range redundancy", it is necessary that the sensitivity of upstream circuit breakers to short-circuit current (SCC) be sufficiently high. This means that in the existing and operating system of "step" selective protection, all elements of the electrical installation must be thermally stable with a longer protection operate time than calculated during design, namely, with the operate time of the upstream selective circuit breaker.

The essence of long-range redundancy (LRR) is that in the event of failure of any switch, backup protection of the emergency section of the electric circuit is carried out by a circuit breaker located at a higher protection stage [7]. The reliability of protection of a section of the electric network is determined by the probability of failure-free operation of the circuit breaker protecting this section. The value of 0,95 of the probability of failure-free operation of the CB when performing protective functions guaranteed by the manufacturer does not meet modern requirements. Therefore, an important direction for increasing reliability is the transition to protection not by one, but by a system of two devices. According to [8], with the probability of failure-free operation of each device equal to 0,95, the probability of failure-free operation of a protection system of two such devices is 0,9975. Thus, when implementing LR, the probability of protection failures is significantly reduced. To ensure such a high reliability indicator, it is necessary to ensure close response times of the upper and lower protection stages. This means that at all protection stages, the circuit breakers must have the same sensitivity to short-circuit currents, especially remote ones. With the step-time principle of selective protection, the operate time of a selective circuit breaker installed closer to the source may be unacceptably longer than the response time of a circuit breaker installed closer to the load. In this connection, the requirement for high operate speed of selective protection necessary to increase the level of fire safety of electrical installations and the reliability of current protection is difficult to meet.

The operate time of the upstream device is usually two or more times longer than that of the failed downstream device. That is, due to the limited possibilities of the sensitivity increasing to remote short-circuit currents of the existing equipment, the reduction in the protection operate time has not been achieved when implementing the "long-distance backup" mode. The time-current characteristic of the total selective protection system has not changed. The elements of the electrical installation that experience critical thermal load in emergency mode continue to exist. Thus, the existing protection system does not fully ensure reliable protection of electrical installations 0,4 kV substation auxiliary due to the implementation of "long-distance backup". In this regard, further improvement of the relay-current protection system in terms of sensitivity increasing to remote short-circuit currents is considered relevant.

II. ANALYSIS OF LAST RESEARCHES

The need to increase the reliability of electrical installations with the most problematic busbars in terms of reliable provision of "long-range backup" of relay-current protection is appropriately illustrated by a fragment of the generalized basic diagram of the electrical installation of 0.4 kV auxiliary services of one NPP unit (Fig. 1). Here, there are several sections of branched electrical circuits with a different number of protection stages between the source and receiver of electric power. The largest number of protection stages is in the circuits with cabinets for relay-current protection of equipment (RCPE), where at the 1st stage (I) after the current source with the Active power relay (APR), microprocessor current protection (MCP) and the 6/0.4 kV power transformer (PT), an "Electron" circuit breaker is installed, at the 2nd stage (II) – A3790C circuit breakers, at the 3rd stage (III) – BA55A31 circuit breakers, and at the last 4th (IV) (lowest) stage – АП-50Б ones. Each stage has parameters of the circuit breaker operating current I_r, current settings I_{sd}, remote short-circuit or reserving current I'_{sd}, parameters of the time delay for disconnection under the selectivity condition t_{sd}, short-circuit currents I_{sc}. The diagram also shows microprocessor protection devices (MPD) with current sensors (CS), starting currents of motors I_{st}, and the cross-sectional dimensions S of cable lines.

With such a multi-stage protection system, each of the circuit breakers installed at the highest stage must ensure, on the one hand, selectivity of operation with the

downstream device, and on the other hand, backup of a possible failure of the downstream circuit breaker. The listed requirements are largely contradictory, which significantly complicates the implementation of the "long-range backup" mode and does not allow for a full increase in the reliability of protection. Let's analyze what problems caused by the imperfection of the protective characteristics of existing devices still require solutions.

As can be seen from the diagram (Fig. 1), the sections of the circuits behind the A3790C and АП50Б circuit breakers (stages II and III) will be unprotected in the event of their failure (shaded sections of the busbar). This necessitates increasing the sensitivity to remote short-circuit currents when implementing the "long-range backup" mode of circuit breakers of stages I and III of protection ("Electron" and BA55A31, respectively). To increase the sensitivity of the "Electron" circuit breaker of stage I to short-circuit currents, in contrast to the starting current of the electric motor (EM), which is close in magnitude, the value of the power factor cos φ of the circuit is used as a criterion for detecting short circuits. As is known, in the case of a short circuit on an extended cable line, the value of cos φ is $0,6 \div 0,7$, whereas during acceleration of the electric motor, the value of cos φ is $0,2 \div 0,3$ [8] –[9]. However, due to the fact that the release mechanism units of existing circuit breakers, including the "Electron" device, do not have a function for determining the value of cos φ of the protected circuit, the sensitivity of the circuit breaker of the first protection stage is increased using relay equipment on the side of high-voltage circuits, which includes maximum current protection (MCP) with two current settings (Fig. 1). In this case, the operating of the lower setting current value occurs only from the current determined by the active power value.

The imperfection of such a technical solution for increasing sensitivity to short-circuit currents is that high-voltage equipment can be used only for the first stage of protection, monitoring the current on the high side of the transformer. It is impossible to use such relay equipment for third-stage circuit breakers. But if such a technical solution were possible in a similar device for 0,4 kV, another disadvantage would appear – insufficient protection operating speed. Indeed, an accurate determination of cos φ by the shift angle between the current and voltage in the phase is possible only after the end of the transient process, after $60 \div 80$ ms.

However, such a protection operate time is unacceptable when implementing high-speed selective protection. To solve this problem, an alternative option was proposed – in the event of failure of the АП-50Б circuit breakers, to protect 1.5 mm^2 and 2.5 mm^2 cables when emergency current flows through them, the current protection sensitivity in the overload zone in the BA55A31 circuit breakers was increased.

This technical solution allows the protective time-current characteristic of the overload zone to be formed in accordance with the formula $5 \cdot I^2 \times 4(\mathrm{A}^2 \times \mathrm{s}) = \mathrm{const}$ instead of the previously used one $6 \cdot I^2 \times (\mathrm{A}^2 \times \mathrm{s}) = \mathrm{const}$, which in the "long-distance backup" mode will ensure the thermal stability of cables located behind the АП-50Б circuit breakers [10] – [12]. However, in the case of an "arc" short circuit (90% of all short circuits are "arc") in the "long-distance backup" mode, the arc burning time increases significantly from 25 msup to 550 ms. Such a solution for protection against remote short circuits cannot be considered technically exhaustive, but rather forced, due to the lack of appropriate protective means in which increased sensitivity in the short circuit zone is realized due to the identification of the type of overcurrent.

Another problem that reduces the efficiency of the "long-range backup" is the insufficient operate time of the "step-time" selectivity, when a technically incorrect time-current characteristic of the entire protection system is formed. The incorrectness is that the closer the protection stage is to the current source (meaning the higher the short-circuit current), the longer the protection operate time at this stage (Fig. 2a). Curve 1 (Fig. 2a) displays the time-current characteristic of the "step-time" selective protection, consisting of 4 stages, for the case when all protection devices operate in the normal mode (without failures). At the IV protection stage, where the short-circuit current is no more than 1,5 kA, the operate time is about 15ms, and at the first stage, where the emergency current is 20 kA, the operate time is significantly longer – $550 \div 700$ ms. With such long protection operate times, the elements of the electrical installation, especially at the first stage of protection, experience significant thermal and dynamic loads [10] – [11].

However, even greater thermal loads are experienced by buses and cables when the protection operates in the "long-distance backup" mode, when, in the event of a failure of a downstream device, protection is provided by an upstream circuit breaker. Curve 2 reflects the time-current characteristic of the protection in the "long-distance backup" mode (Fig. 2a). In this mode, the elements of the electrical installation, primarily cables with a cross-section of $S \geq 95$ mm, protected by second-stage circuit breakers (Fig. 1), experience an increase in the thermal load from the current flowing through them by more than 2 times. The protection operate time t at the second stage increases up to Δt_{op} = 0,3 s (from 0,25 s up to 0,55 s), and at the third stage – up to Δt_{op} = 0,15 s (from 0,1 s up to 0,25 s) [10] – [12].

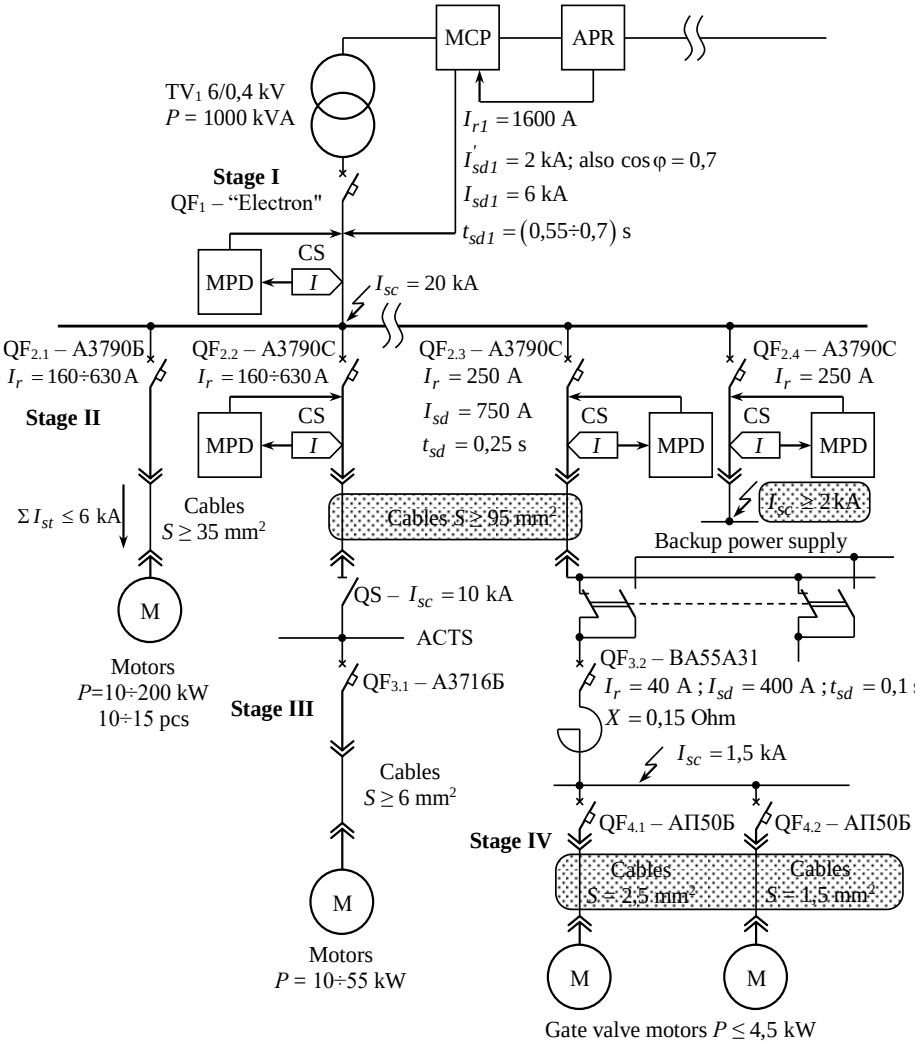

Figure 1. Fragment of the generalized diagram of the 0.4 kV auxiliary electrical installation NPP

The specified increase in the operate time of the stage II protection in case of failure of the A3790C circuit breaker in the cabinets of auxiliary complete transformer substations (ACTS) and RCPE creates a problem of thermal resistance of cables in cable compartments after the specified circuit breakers.A partial solution is possible by increasing the cable cross-section and using enhanced fire extinguishing means in the "problem" cabinets. However, it should be taken into account that 90-95% of short circuits occur not through "dead" metal, but through a short electric arc. In this case, with a long protection operate time, the problems of thermal resistance of cables and fire safety of the cabinet are not completely eliminated, and the specified solutions cannot be considered exhaustive and technically correct. Such forced solutions are used due to the lack of equipment in which fast-acting selective protection can be implemented.

The results of the analysis of the problems with the implementation of the "long-range backup" mode showed that in order to improve the reliability of the RCPE system, it is necessary to increase the sensitivity to remote short-circuit currents. The currently used method of increasing sensitivity is forced, both from the point of view of technical implementation and instrumental execution. Low sensitivity and insufficient speed cause instability in the operation of the main busbar, as well as the IV stage due to the significant operate times of protective devices for cables with a cross-section of 1,5 mm^2 and 2,5 mm^2 in redundancy mode. When using "step" selective protection, the operate times of the protection in the redundancy mode are unacceptably long. Therefore, cables after the A3790C circuit breakers in the redundancy mode experience critical thermal loads[12].

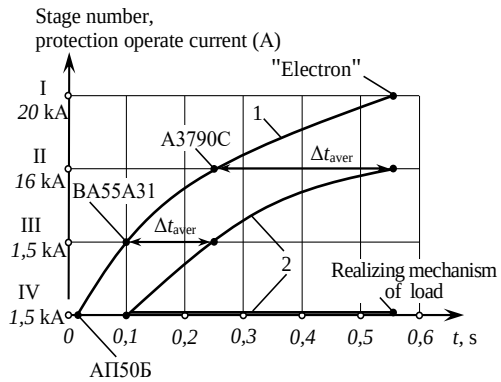

a

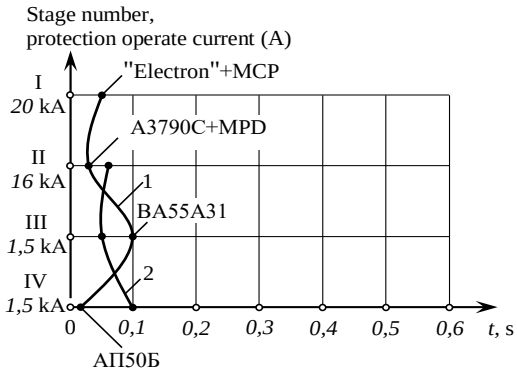

b

Figure 2. The Time-current characteristic of selective protection:
a – before modernization "step-time" selectivity;
b – after modernization fast-acting integral selectivity;
1 – curve attributes to the standard mode;
2 – curve attributes to the "long-range backup" mode

An analysis of the existing problems in realization the "long-range backup" protection in the electrical installations of the auxiliary substations of 0,4 kV NPP substations showed:

– due to low sensitivity to remote short-circuit currents, the required accuracy and reliability of the protection of the section of the electrical installation at the end of the main busbar is not ensured;

– technically incorrect protective characteristics of the existing "step-time" selectivity cause to the fact that the operate time of the protection is longer, the closer the device is to the current source, and the thermal resistance of the cables in the cable compartments does not meet the fire safety requirements.

III. FORMULATION OF THE WORK PURPOSE

This paper presents a scientific and technical solution for upgrading relay-current protection systems for 0,4 kV electrical installations using digital technologies. This solution will allow for a deep analysis of processes in electrical circuits and the implementation of "long-range redundancy" by building high-speed selective protections and increasing the sensitivity of protections to short-circuit currents. As a result, the protection reliability of electrical installations for auxiliaries of 0,4 kV NPP substations will increase.

IV. EXPOUNDING THE MAIN MATERIAL AND RESULTS ANALYSIS

The sensitivity of protection devices to short-circuit currents can be increased by adjusting the starting currents of powerful asynchronous electric motors, the values of which can be greater than the values of remote short-circuit currents. To do this, it is necessary to promptly determine the type of interference current, whether it is a remote short-circuit current at the end of the protected line or the starting current of an electric motor of an adjacent feeder. In the operation algorithm of the circuit breaker release, it is necessary to add an additional setting I'_{sd} to the existing setting of the short-circuit zone current I_{sd}, which is selected based on the value of the direct starting current of the EM, which is less than I_{sd} and corresponds to the expected current of the remote short-circuit. The lower setting should be blocked during EM starts and activated during a remote short-circuit.

The short-circuit surge current in any phase will be greatest if the short circuit occurs at the moment the phase EMF passes through zero. For this case, the change in phase current over time *t*is described by the equation:

$$i = I_m[\sin(\omega t + \psi - \varphi) + \sin(\varphi - \psi)\cdot e^{-t/\tau}] \qquad (1)$$

where I_m – is the amplitude value of the periodic component of the short-circuit current in the phase; $\varphi = \mathrm{arctg}\,(\omega L / R)$ – is the shift angle by which the periodic component of the phase current lags behind the phase EMF; *L*, *R*– are the inductance and active resistance of the phase; $\tau = L / R = \mathrm{tg}\,\varphi / \omega = \sin\varphi / (\omega\cdot\cos\varphi)$ – is the time constant of the electric circuit; $\omega = 2\cdot\pi\cdot f$ – is the angular frequency of the network; *f*– is the operating frequency of the network; ψ – is the moment of occurrence of the short-circuit.

The nature of the change in time of the current in any phase of the electric circuit depends significantly on such a random factor as the moment of occurrence of the disturbance current, characterized by the angle ψ. Therefore, it is not impossible to analyse the nature of the transient process of disturbance of the electric circuit based on the instantaneous values of current $i_{j(a,b,c)}$ in each phase *a, b, c,* obtained from the current sensors DT (Fig. 1). We used the power function of the electric circuit $S(t)$, which characterizes the total electrodynamic forces in a three-phase current system and represents the dependence on time of the sum of the squares of the instantaneous values of all three phases currents [8]:

$$S(t) = \Sigma i_j^2 = i_a^2(t) + i_b^2(t) + i_c^2(t), \quad (2)$$

where i_j – is instantaneous (discrete) value of current; $i_a(t) + i_b(t) + i_c(t)$ – are instantaneous values of currents in phases a, b, c respectively:

$$i_a = I_m[\sin(\omega t + \psi - \varphi + \frac{2}{3}\cdot\pi) - \\ -\sin(\psi - \varphi + \frac{2}{3}\cdot\pi)\cdot e^{-t/\tau}]; \quad (3)$$

$$i_b = I_m[\sin(\omega t + \psi - \varphi) - \sin(\psi - \varphi +)\cdot e^{-t/\tau}]; \quad (4)$$

$$i_c = I_m[\sin(\omega t + \psi - \varphi - \frac{2}{3}\cdot\pi) - \\ -\sin(\psi - \varphi - \frac{2}{3}\cdot\pi)\cdot e^{-t/\tau}]; \quad (5)$$

where ψ – is the initial angle of the EMF in phase *b* (the moment of occurrence of the disturbance current).

After substituting equations (3)-(5) into (2) and transforming the obtained expression, the equation for the force function takes the following form:

$$S(t) = 3I_{ph}^2\left[1 - 2e^{-\frac{1}{\tau}}\cdot\cos\omega t + e^{-\frac{2t}{\tau}}\right] \quad (6)$$

where I_{ph} – is an effective value of the periodic current component.

From equation (6) it follows that the nature of the change in time of the function *S(t)* in the transient mode of occurrence of the disturbance current of the electric circuit does not depend on the angle ψ, but depends significantly on the power factor cos φ.

Fig. 3 shows a family of curves of the power function constructed according to equation (6) for cases of three-phase disturbance of the electric circuit with different cos φ, but the same value of I_{ph}, equaled to 1. The smaller the cos φ of the electric circuit, the greater the value of the $S(t)$ function in the first period of the transient mode. Thus, by calculating in real time the maximum S_{min} and minimum S_{max} values of the power function in the first period of the occurrence of a disturbance in the electric circuit, it is possible to quickly determine cos φ and identify the type of disturbance current. In [13], the identification of the disturbance current is based precisely on the analysis of the $S(t)$ function. Selective protection is ensured by the operation of the circuit breakers from the integral setting Q_{sd}. In this case, the calculation of the integrals $Q_{(a,b,c)}$ of the squares of the disturbance currents $\Delta i_{j(a,b,c)}^2$ begins after the activation of the setting $I_{sd}^{'}$.

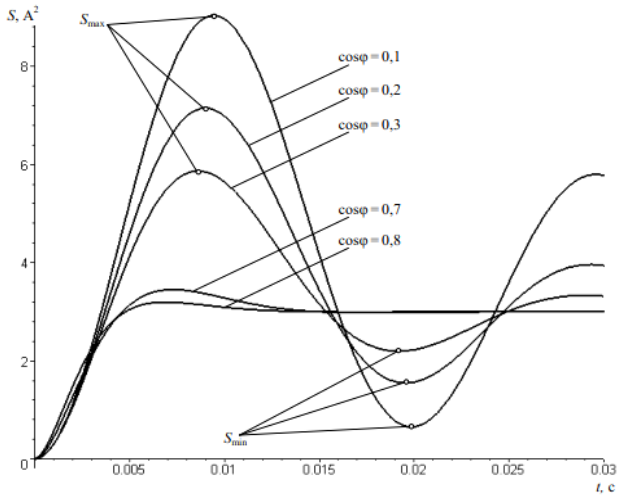

Figure 3. The time-current characteristic of selective circuit

When the electric circuit is under load, the disturbance current is not the total value of the current in the phase I_{ph}, and the current increment ΔI_{ph}, defined as the difference between the total current I_{ph} in the phase, recorded by the sensors, and the previouscurrent I_{pr}, which flowed in the electric circuit (load) before the occurrence of the disturbance current:

$$\Delta I_{ph} = I_{ph} - I_{pr}. \quad (7)$$

The calculation of the value of ΔI_{ph} is carried out using the function $S(t)$, the nature of the change of which, as already noted, does not depend on ψ, but significantly depends on the value of cos φ and the component ΔI_{ph}. If we substitute instantaneous discrete values of the disturbance currents $\Delta i_{j(a,b,c)}$ into equation (2), it can be determined the value of ΔI_{ph} quickly.Therefore, the value of the disturbance current ΔI_{ph} is introduced into the complex criterion for the operation of the protection, which allows, due to the ability to tune out overload currents, to significantly increase the sensitivity of the protection to remote short circuits, and rapid identification of the type of disturbance current of the electric circuit (remote short circuit or EM starting) allows increasing the speed of protection at higher stages.

The measurement of instantaneous values of current $i_{j(a,b,c)}$ in each phase of the electric circuit and their analog-to-digital conversion is carried out at equal time intervals Δ*t*. With a shift in the time interval by Δ*t*, the calculation of instantaneous values of disturbance currents $\Delta i_{j(a,b,c)}$ is carried out.

$$\Delta i_{j(a,b,c)} = i_{j(a,b,c)T_1} - i_{j(a,b,c)T_0} \quad (8)$$

where i_{jT_1} – are the instantaneous values of each phase current of the electric circuit during the current period T_1 of current change; i_{jT_0} are the instantaneous valuesof current in the previous period of current change T_0 (previous current).

Calculation of the integrals $Q_{(a,b,c)}$ of the squares of the instantaneous values of the increment in each phase is performed according to the formula:

$$Q_{(a,b,c)} = \int_0^T \Delta i^2_{j(a,b,c)} dt = \sum_0^T \Delta i^2_{j(a,b,c)} \Delta t, \quad (9)$$

The value of $Q_{(a,b,c)}$ is compared with the value of the integral setting Q_{sd} of the circuit breaker release unit. The moment of time corresponding to $Q_{(a,b,c)} = Q_{sd}$ is used to form the release time delay of the integral selective protection t_Q. The calculation of the integrals $Q_{(a,b,c)}$ begins at the moment of time when the instantaneous value of the disturbance current $\Delta i_{j(a,b,c)}$ in one of the phases becomes greater than the value of $\sqrt{2I'_{sd}}$, where I_{sd} is the value of the current setting selected taking into account the protection against remote short circuits. If the disturbance current is three-phase, then the total integral of all three phases during the period of current change T is equal to:

$$Q_\Sigma = \sum_0^T Q_{(a,b,c)}. \quad (10)$$

By dividing the value of Q_Σ by the maximum value S_{max} of the sum of the squares of the instantaneous values of the currents $\Delta i_{j(a,b,c)}$ (2) the time is determined:

$$t_{sm} = Q_\Sigma / S_{max}. \quad (11)$$

The value of t_{sm} is used to determine the value of the power factor cos φ of the electric circuit. The time t_{sm} is the time during which the equivalent thermal effect of the disturbance currents, the sum of the squares of which is equal to S_{max}, is equal to the actual thermal effect of the disturbance currents during the period of the current change. That is, this is the time of the equivalent thermal effect on the network of the maximum sum of the squares of the currents of all three phases, which depends on the value of cos φ.

Mathematically, the time t_{sm} is determined from the equation:

$$\int_0^T S\left[\Delta i^2_{j(a,b,c)}(t)\right] = \int_0^{t_{sm}} S_{max}. \quad (12)$$

At cos φ = 0,3, typical for EM starting, and cos φ = 0,7, typical for remote short circuit, the t_{sm} values differ significantly from each other (12,2 ms and 16,4 ms, respectively), which indicates the importance of the t_{sm} time for reliably determining the cos φ value [13]. Thus, by analyzing the $S(t)$ function in the first period of disturbance current occurrence, it is possible to quickly identify the type of overcurrent and tune out the EM starting currents.

The dependence of the power factor cos φ on time t_{sm} is also used to determine the value of ΔI_{ph} from the formula:

$$S_{max} = 3\Delta I^2_{ph} \cdot K^2_{sh} \quad (13)$$

where K_{sh} is the shock factor of short-circuit current in an electric circuit, the value of which is determined by the known dependence $K_{sh} = f(L/R)$ [8, 14].

Here it is empirically calculated:

$$\Delta I_{ph} = \sqrt{\frac{S_{max}}{3 \cdot K_{sh}}} \quad (14)$$

The necessary correction of such a possible factor as overload current in adjacent feeders, increasing the phase current of the protective device, is carried out due to fast continuous monitoring of the ΔI_{ph} value, when the ΔI_{ph} value in the microprocessor memory is updated every period T of current change. The load current of the set of consumers connected to the protected line cannot be greater than the operating current of the line I_r. This means that the disturbance current of the electric circuit caused by the connection of one consumer also cannot be greater than I_r. Since the probability of simultaneous connection of several consumers to the line during the time interval T = 20 ms is extremely small [15], then in the current zone the short-circuit does not respond to overload currents. That is, the use of the ΔI_{ph} current as one of the criteria for the operation of the current protection eliminates the negative effect of previously existing load currents on the accuracy of the protection operation. The determination of the cos φ value, and then the ΔI_{ph} value is based on the analysis of integrals (9). Therefore, the calculation of the integrals $Q_{(a,b,c)}$ is performed before determining the value of ΔI_{ph}, namely at the moment when the instantaneous value of the current

$\Delta i_{j(a,b,c)}$ in one of the phases becomes greater than the value of $\sqrt{2}I'_{sd}$. This allows ensuring the response time of the integral selective protection of less than 20 ms, i.e. increasing the protection response speed compared to [14].

Using a complex protection operate criterion that combines several parameters allows simplifying the operation algorithm of the microprocessor release unit when implementing high-speed current protection with high sensitivity to remote short-circuit currents, since the calculation of the integrals (9) is simultaneously used both for implementing the integral selective protection and for protecting against remote short-circuits. Thus, the MPD of the circuit breaker forms a more advanced time-current characteristic of the protection, shown in Fig. 4.

Tosolve theabove problemsofprotecting 0,4k Velectricalins tallations, it washa vedeveloped microprocessorprotection devices with improve dprotecti vecharacteristics:

– improved protection based on selective increase in sensitivity to remote short-circuit currents;

– high-speed integral selective protection, when implemented, the operate time of the protection of the upper (closer to the source) stages of protection can be reduced or remain at the level necessary for the protection of the lower stages of protection (further from the source).

The essence of these solutions is reliable, regardless of the moment of occurrence of the electric circuit interference current, and fast, within the first 10 ms, identification of the interference current type (start of electric motors, short circuit or short-term overload), as well as determination of its effective value[7], [12] – [13]. This, in turn, allows to correctly construct the required protection response algorithm:

–instantaneous shutdown, if the effective value of the current in the phase I_{ph} is greater than the value of the current "cutoff" setting I_i : $I_{ph} > I_i$;

–selective shutdown by the downstream device when a short-circuit current occurs, if the current value If is greater than the sensitivity setting I'_{sd} : $I_{ph} > I'_{sd}$;

–automatic increase of the current setting to the I_{sd} value, sufficient for reliable starting and acceleration of the electric motor.

Such an algorithm, implemented by a microprocessor device, allows to significantly improve the protective time-current characteristic of each device of all protection stages and the entire system as a whole. Devices with new protections can be implemented both in the form of electronic tripping units of circuit breakers and in the form of separate microprocessor protection devices, which are advisable to use when upgrading existing electrical installations, since in this case their structure is completely preserved, and the financial costs of upgrading are significantly reduced [12] – [14].

Fig. 1 shows the microprocessor-based protection devices (MPDs) installed into separate blocks near the A3790C and "Electron"circuit breakers. The MPD output circuits act on the independent electromagnetic release devices (IERDs) of these circuit breakers. Thus, the principle of adding missing types of protection adopted for the Electron switches is proposed to be applied to the A3790C switches as well.

Fig. 4 shows the protective time-current characteristic of the switch operating in conjunction with the MPDs, obtained as a result of modernization. The solid lines show the protective characteristics generated by the device itself. The dotted lines show the protective characteristics illustrating the MPD operation. The current setting I_{sd}, selected based on the motor starting condition, is supplemented by a smaller setting I'_{sd}, ensuring high sensitivity to short-circuit currents. Before the modernization, the transition from the overload zone *L*to the short-circuit zone *S*occurred along trajectory 2-3. In the new protection, this transition, depending on the cause of the circuit failure, can occur either along line 2-3 (setting I_{sd}) or along trajectory 2-7-8 (setting I'_{sd}). The protection can operate at a time determined by both the conventional time setting t_{sd} and the "integral" Q_{sd}, due to which the operate time at high short-circuit currents is significantly reduced. This makes the new protection fast-acting and highly sensitive to short-circuit currents.

On the abscissa axis, the protective characteristic has two parameters: the total phase current I_{ph}, to the value of which the circuit breaker release reacts in the overload zone, and its increment – the circuit disturbance current ΔI_{ph}, to the value of which the MPD reacts in the short-circuit zone. This increases the reliability of detecting small short-circuit currents, since the cos φ value is determined only for the circuit disturbance current ΔI_{ph}: starting the electric motor or short-circuit, and not for the total current I_{ph}, which can contain both reactive starting currents and small active short-circuit or short-term overload currents.

Section 1-2 (Fig. 4) of protection against overload currents is formed in the existing tripping units of automatic circuit breakers. Here, the operate time t is inversely dependent on the value of the total current I_{ph} in the phase.

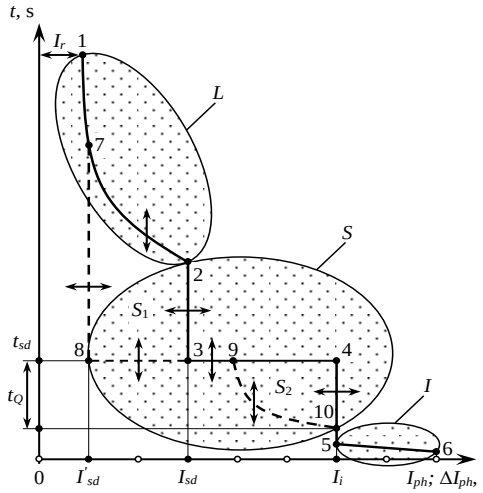

Figure 4. Time-current protective characteristic of the breaker operating together with the MPD after modernization:
L – overload zone protection;
S – short-circuit zone protection;
S_1 – remote short-circuit protection or backup
S_2 – high-speed integral selective protection;
I – protection in the "cutoff" zone

The MPD is "tuned" to overload currents due to the fact that the phase currents I_{ph} represent the sum of the currents of all consumers connected to the line, and the value of the load current of each of the connected consumers cannot be greater than the operating current I_r of the protected line. Consequently, the disturbance current ΔI_{ph} of the electric circuit caused by the connection of one consumer also cannot be greater than the current I_r. The probability of simultaneous connection of several consumers to the line during a period of 20 ms is very small, and the MPD in the short-circuit current zone does not respond to overload currents. Continuous monitoring of the current ΔI_{ph} ensures "zeroing" of the history after each period of current change (every 20 ms). As a result of the "adjustment", whatever the value of the total current, the MPD protection does not react to it when it increases from point 1 to point 2 in zone *L* (Fig. 4). The transition from the overload zone *L* to the short-circuit zone *S*, depending on the type of interference current ΔI_{ph}, is carried out either along the 2-3 path when $I_{ph} > I_{sd}$, taking into account the guaranteed start and acceleration of the electric motor, or along the 2-7-8 path in the case of a "long-range reserve" during a remote short circuit. If the current ΔI_{ph} is identified as a starting current for the electric motor, then the current protection setting increases from the remote short-circuit setting I'_{sd} to the I_{sd} value selected based on the condition of starting and acceleration of the electric motor. The section between the current I'_{sd} and the current I_i, which determines the "cutoff" setting, is formed by the time and integral modules of the MPD. These modules form the operate time of the selective protection in parallel according to two different dependencies. The operate time generated by the time module $t = t_{sd} = const$ does not depend on the magnitude of the electric circuit current, and the operate time t_Q generated by the integral module is inversely proportional to the magnitude of the effective value of the current flowing in the phase. High-speed integral selectivity is ensured by parallel generation of operate times. If a small short-circuit current occurs ($\cos\varphi = 0,6 \div 0,7$), the MPD operates even at a current $I_{ph} = I'_{sd}$, close in magnitude to the operating current I_r of the device (section 1-7 on the MPD characteristic). The operate time in this case is limited by the value of the fixed time delay $t_{sd} = \text{const}$ (trajectory 8-4, or 9-4). At significant short-circuit currents, the operate time *t* decreases (trajectory 9-10) due to the fact that the integral setting Q_{sd}, which ensures selectivity, takes into account the reaction of the breaker located downstream in the circuit. In this case, the integral of the electrical circuit release by the upstream breaker turns out to be significantly less than the integral of the same circuit release by the downstream switch with a fixed release time delay. In other words, if the MPD has an integral setting Q_{sd}, the value of which is chosen to be twice as large as the integral of the electric circuit tripping by the downstream device, then the operate time of the selective protection will be significantly less than the expected operate delay t_{sd}. The reduction in the operate time of the selective protection is characterized by Section 4-10. The selectivity of downstream and upstream devices is preserved, and the selective operate time is significantly shorter than with the "step-time" selectivity. For example, with the "step-time" selectivity, the operate time setting of the upstream A3790C circuit breaker of the RCPE cabinet should be $t_{sd(d)} = 0{,}2$ s with the operate time setting of the downstream BA55A31circuit breaker $t_{sd(up)} = 0{,}1$ s. When the MPD is operating, the operate time of the A3790C circuit breaker from the integral setting Q_{sd} decreases. If the operate integral of the downstream BA55A31 circuit breaker at a maximum short-circuit current of *1,5* kA for the place of its installation is $Q_{sd(d)} = (1{,}5\,\text{kA})^2 \times 0{,}1\,\text{s} = 2{,}25 \times 10^5\,\text{A}^2 \times \text{s}$, then with the integral setting of the upstream circuit breaker $Q_{sd(up)} = 4{,}5 \times 10^5\,\text{A}^2 \times \text{s}$, the MPD operate time at a short-circuit current at the place of installation of the A3790C circuit breaker equal to 16 kA will be 6 ms. The operate time of the A3790C circuit breaker on the com-

mand of the MPD, taking into account the mechanism's own operate time and the duration of the arc extinction process, will be no more than 20 ms, which is an order of magnitude less than the "step-time" selectivity setting $t_{sd} = 0{,}2$ s from the circuit breaker itself. If the interference current ΔI_{ph} exceeds the value of the cut-offsetting I_i , the protection will operate without a deliberate operate delay (trajectory 10-5-6).

It should be especially noted that the technical essence of the fast-acting integral selective protection is not limited to the introduction of an additional integral setting Q_{sd} , which allows reducing the protection operate time even at high short-circuit currents. To implement the possibility of reducing the protection operate time at high short-circuit currents, it is necessary to determine the steady-state value of the circuit disturbance current ΔI_{ph} as quickly and, at the same time, as accurately as possible. The setting I_{sd} , as is known, is set by the effective value of the current, which can be determined only after the end of the transient process of changing the disturbance current, after $40 \div 60$ ms. To avoid false tripping when implementing integral selective protection, the calculation of the integral of the current flowing through the device should be started only after establishing the fact that the current ΔI_{ph} is actually greater than the setting I_{sd} . However, if $40 \div 60$ ms are required to determine the effective value of the current, then such protection can be considered integral, but not fast acting. Therefore, in the proposed integral selective protection, due to the use of microprocessor technology, the effective value of the current is determined very quickly, in the first 10 ms after the occurrence of the current ΔI_{ph} disturbance of the circuit. At the same time, high accuracy of determining the effective value of the steady-state current long before the end of the transient process is ensured by a technical solution that allows "tuning out" from such a random parameter affecting the accuracy of measuring the current ΔI_{ph}, as the phase of occurrence of the disturbance current [6] – [8]. Fig. 2b shows the time-current protective characteristics of the protection system of 0,4 kV substation auxiliary electrical circuits after modernization in normal mode without failures (curve 1) and in the "long-range backup" mode (curve 2). From the given dependencies of the protection operate time *t* on the protection stage number, i.e., $t = f\,(\text{stage number})$, it is evident that along with the increase in the sensitivity of the protection to short-circuit currents, the high speed of operate of the protection devices in the "long-range backup" mode is also maintained. The protection operate time in the "long-range backup" mode in case of failure of the A3790C circuit breaker is $50 \div 60$ ms, which is an order of magnitude less than with "step" selective protection. Due to a significant increase in the protection,operate speed, thermal shocks on the elements of the electrical installation in the ACTS and RCPE cabinets are significantly reduced. The destructive effect (deformation from the resulting pressure) of the arc energy on the walls of the cabinets during an "arc" short circuit is also significantly reduced.

It must be recognized that another format of modernization is also possible, caused by the need to extend the service life of the existing protection system. An alternative modernization technology involves an audit of the existing state of individual units and elements of the protection devices. Based on the results of such an audit, a decision is made on the need to replace the device with a new one, or on the absence of such a need. The use of MPDs for modernization of the protection system allows you to avoid replacing circuit breakers. To do this, the list of MPD protections must be supplemented with those types of protection that are available in the A3790C circuit breakers. This means that the proven example of similar use of Electron circuit breakers can be extended to A3790C ones. Obviously, the time and financial costs of modernizing the 0,4 kV electrical installations for auxiliaries NPP protection system in order to extend the service life with this approach will be minimized compared to the third option of such modernization by replacing existing circuit breakers with circuit breakers from Schneider Electric [17]. Provision of fast-acting, so-called "energy" selective protection based on Compact NS circuit breakers is guaranteed only when using specific types of circuit breakers from Schneider Electric at all lower and higher protection levels [18]. This means that it is necessary to completely change the entire protection structure electrical installations for auxiliaries. Obviously, the financial and time costs for such modernization will be significant.

V. CONCLUSIONS

As a result of upgrading the automation system of 0.4 kV substation auxiliary NPP electrical installations through the use of microprocessor devices with new types of protection:

– theoperate times of protections at all stages have been significantly reduced, both in normal mode and in the "long-range backup" mode, and, accordingly, the thermal effects on the elements of the electrical installation from both the flowing short-circuit current and the effect of an electric arc have been significantly reduced;

– the sensitivity of the protection to remote short-circuit currents has been significantly increased, which eliminates both cases of possible protection failure and its false operation with a certain combination of interference current parameters;

– the modernization of the entire protection system of 0.4 kV substation auxiliary NPP electrical installations through the use of MPDs completely preserves the existing structure of the protection system without replacing the circuit breakers of all stages.

Taking into account the above considerations, it can

be stated that the proposed modernization of electrical installations of 0.4 kV substation auxiliary NPPs due to the use of microprocessor devices with new types of protection will require significantly less time and financial costs, whereas modernization with the same final technical indicators due to the use of circuit breakers from foreign manufacturers (for example, Schneider Electric [17] - [18]or ABB[19] - [20]) leads to a complete or partial replacement of the entire composition of electrical installations for the NPP's 0.4 kV substation auxiliary (the need to replace devices of all stages and cabinets).

REFERENCE

[1] Voronovsky, G.K., Denysiuk, S.P., Kyrylenko, O.V., Stogniy, B.S., Shydlovsky, A.K. (2005). Energyof the World and Ukraine. Figuresand Facts. K. Ukrainian Encyclopedic Knowledge, 404. (in Ukranian)

[2] Levakin, V., Yefimova, K., Polyvoda, S., &Iokst, V. (2017). Regulatory requirements fornucl earandradia tionsafetyforpowersupply systems of nuclear power plants. Nuclear and Radiation Safety, 3(75), 46-49. (in Ukranian) DOI: 10.32918/nrs.2017.3(75).08

[3] Regulatoryact of the State Emergency Service 306.2.205-2016 Requirements for power supply system simpor tantforth esaf etyofnuclear power plants. (2016). Official Gazette of UkraineNo. 10. (in Ukranian)

[4] Rules for the arrangemen to felectrical installations. (2017). K. Ministry of Energy and CoalIndustry of Ukraine, 617. (in Ukranian)

[5] Rezvik, I., Yefimova, K., Polyvoda, S., &Iokst, V. (2017). Modernization off ireextin guishing installations at Ukrainian nuclear power plants. Nuclearandra diationsafety, 4(76), 56-62. (in Russian) DOI: 10.32918/nrs.2017.4(76).09

[6] Soskov, A. G., Kobozev, A.S. (2010). Modernization of the protection system of urbanelectricnet works of 0.4 kV dueto the use of microprocessor technology in circuitb reakerreleases. Lighteng ineerin gandelectric alengineering,2, 53–63. (inRussian)

[7] Chang, C.S., Feng, T., Khambadkone, A.M., Kumar, S. (2000), "Remote short-circuit current determination in DC railway systems using wavelet transform", Electric Power Applications IEE Proceedings, Vol. 147, iss. 6, pp. 520-526. ISSN 1350-2352.

[8] Sereda, O.G., Varshamova, I.S., Litvinenko, V.V., Morgun, V.V. (2013). Technical analysis of modern methods for improving the protective properties of circu it breakers. Bulletinof NTU "KhPI". Series: Problems of improvingelectricalmachinesanddevices. Theoryandpractice. NTU "KhPI",.65 (1038). 61-92. (in Ukranian)DOI: 10.20998/%25x

[9] Ostashevsky, M.O., Yuryeva, O.Yu., ed. Mi-lykh, V.I. (2018). Electric machines and transformers: a textbook. K. Karavela,452. (in Ukranian)

[10] Circuit breakers AP-50B URL: https://svitog.com.ua/product/avtomaticheskij-vykljuchatel-ap-50b-3mt-25-a/

[11] Circuit breakers VA URL: https://www.rimk.biz/va50-41-va50-43-va50-39-va51-35-va50-31-va57-35-va08-08-va09-09-va50-35-avtomaticheskie-vyklyuchateli-(va5000)

[12] Circuit breakers A3700 (VA3700) URL: https://www.rimk.biz/avtomaticheskie-vyklyuchateli-a3700-(va3700)

[13] Pat. 101084 of the Ukrainian MPK (2013.01) H02N 3/08 (2006.01), H02N 7/00, H01N 73/00. Method off ast-acting maximum current protection with high sensitivity toremoteshort-circuitcurrents / O.S. Kobozev, O.G. Sereda. – No. a201109057; filedon 19.07.2011; publishedon 25.02.2013, Bull. No. 4. 6.(in Ukranian)

[14] Pat. 73195 ofUkraine MPK H 02 H 3/08 Method of maximum current protection of electrical installations /G.M. Gaponenko, Y.M. Agafonov, S.G. Rassomakhin, V.M. Shlokin. – No. 2003010807. Filedon 30.01.2003; Publ. 15.06.2005, Bull. No. 6. 6.(in Ukranian)

[15] Horbachuk, V. M., Kushlyk-Dyvulska O. I. (2023). Probability Theory and Mathematical Statistics K. Igor Sikorsky Polytechnic Institute, 351. (in Ukranian)

[16] Garlapati, S., Hua Lin, Sambamoorthy, S., Shukla, S.K., Thorp, J.S. (2010), "Agent Based Supervision of Zone 3 Relays to Prevent Hidden Failure Based Tripping", IEEE International Conference on Smart Grid Communications, 4-6 October 2010, 256-261. ISBN 978-1-4244-6510-1.

[17] Manual on the arrangement of electrical installations. Schneider Electric technical solutions. Technical collection Schneider Electric. (2019). Schneider Electric, 596.

[18] Coordination of low voltage protection. Technicalcollection Schneider Electric. (2008). 4. 49. https://www.electrocentr.com.ua/files/documentation/SE/TechLibrary/Vipusk4-Koordinacia_zashit.pdf

[19] Technical Application Papers No.1 – Low Voltage selectivity with ABB circuit-breakers (2024). 56. https://library.abb.com/r?q=technical%20application%20papers

[20] Technical Application Papers No.4–ABB circuit-breakers inside LV switchboards (2012). 56. https://library.abb.com/d/1SDC007103G0202

Received 17.04.2025;
Accepted 23.05.2025;
Published 14.06.2025;

ПІДВИЩЕННЯ ЗАХИСНИХ ВЛАСТИВОСТЕЙ ЕЛЕКТРООБЛАДНАННЯ В ШАФАХ НИЗЬКОЇ НАПРУГИ КОМПЛЕКТНИХ ТРАНСФОРМАТОРНИХ ПІДСТАНЦІЙ ВЛАСНИХ ПОТРЕБ АЕС

СЕРЕДА О.Г. *д-р техн. наук, доцент, професор кафедри електричних апаратів Національного технічного університету «Харківський політехнічний інститут», Харків, Україна,* https://orcid.org/0009-0003-5243-3828, *e-mail: oleksandr.sereda@khpi.edu.ua*;

ЖОРНЯК Л.Б. *канд. техн. наук, доцент, доцент кафедри електричних та електронних апаратів Національного університету Запорізька політехніка, Запоріжжя, Україна,* https://orcid.org/0000-0002-1417-4859, *e-mail: zproton@zp.edu.ua;*

СЕРЕДА О.Г. *канд. техн. наук, доцент, доцент кафедри електричних апаратів Національного технічного університету «Харківський політехнічний інститут», Харків, Україна,* https://orcid.org/0000-0003-4658-9554, *e-mail: olena.korol@khpi.edu.ua;*

Мета роботи. *Проаналізувати існуючі проблеми в системі релейно-струмового захисту електроустановок підстанцій власних потреб 0,4 кВ атомних електростанцій, які не дозволяють реалізувати режим "далекого резервування", а також підвищення чутливості пристроїв релейного захисту до струмів короткого замикання шляхом використання додаткових критеріїв для ідентифікації аварійних режимів з метою забезпечення селективності та захисту від відмов дистанційного резервування.*

Методи дослідження. *Метод системного аналізу та синтезу, а також теорія електромагнітних перехідних процесів в електроенергетичних системах для діагностики аварійних режимів роботи розподільних електричних кіл.*

Отримані результати. *У статті показано необхідність та наведено науково-технічне обґрунтування пропозицій щодо модернізації систем релейно-струмового захисту електроустановок 0,4 кВ з використанням цифрових технологій для реалізації вимог «далекого резервування». Запропоновано науково обґрунтоване технічне рішення щодо модернізації автоматичних вимикачів з використанням мікропроцесорних пристроїв захисту, вихідні кола яких впливають на незалежні електромагнітні розчіпні пристрої цих автоматичних вимикачів. Таке рішення дозволяє провести поглиблений аналіз процесів в електричних колах та реалізацію «далекого резервування» шляхом побудови швидкодіючого селективного захисту та підвищення чутливості захисту до струмів короткого замикання. В результаті модернізації електроустановок підстанцій власних потреб 0,4 кВ АЕС завдяки впровадженню нових типів релейно-струмового захисту можливе наступне: значне скорочення часу спрацьовування захисту на всіх етапах між джерелом та приймачем електроенергії, як у нормальному режимі, так і в режимі «далекого резервування», і, відповідно, значне зменшення теплового впливу на елементи електроустановок як від протікання струму короткого замикання, так і від впливу електричної дуги; значне підвищення чутливості захисту до струмів дистанційного короткого замикання, що виключить як випадки можливого збою захисту, так і його помилкового спрацьовування. Після модернізації всієї системи захисту за рахунок використання мікропроцесорних пристроїв захисту, існуюча структура системи захисту буде повністю збережена без заміни вимикачів усіх ступенів, що дозволить суттєво заощадити час та фінансові витрати порівняно з іншими варіантами модернізації.*

Наукова новизна. *У статті представлено технічне рішення для модернізації автоматичних вимикачів з мікропроцесорними пристроями захисту, в якому вихідні кола діють на незалежні електромагнітні механізми розблокування цих пристроїв.*

Практична цінність. *Розробка дозволяє підвищити надійність протиаварійної автоматики, а також пожежну безпеку підстанцій власних потреб атомних електростанцій напругою 0,4 кВ.*

Ключові слова: автоматичний вимикач; надійність; мікропроцесорний пристрій захисту; резервування на далеку відстань; блок розблокування мікропроцесора; дистанційне резервування; час спрацьовування