UDC 621.313

ENHANCEMENT OF MATHEMATICAL MODELS FOR AC ELECTROMECHANICAL CONVERTERS

HIZENKO M.D. postgraduate student of the department of electrical and electronic apparatus, National University "Zaporizhzhia polytechnic", Zaporizhzhia, Ukraine, ORCID: https://orcid.org/0009-0006-8584-6022, e-mail:; nhizenko.freshcode@gmail.com;

LUKASH D.V. postgraduate student of the department of electrical and electronic apparatus, National University "Zaporizhzhia polytechnic", Polytechnic National University, Zaporizhzhia, Ukraine, ORCID: https://orcid.org/0009-0002-9191-5179, e-mail: lukash.dmitry.v@gmail.com;

SHVED A.S. postgraduate student of the department of electrical and electronic apparatus, National University "Zaporizhzhia polytechnic", Zaporizhzhia, Ukraine, ORCID: https://orcid.org/0009-0000-6822-1190, e-mail: gemix555@gmail.com;

Purpose. *Development of mathematical models of electromechanical AC converters invariant to the speed of rotation of the coordinate system using as state variables of electromechanical converters the modules of the resulting vectors of three-phase variables and their phase shifts relative to each other for the development of new structures of automated asynchronous electric drives.*

Methodology. *Mathematical modeling methods for electromechanical systems, numerical methods for solving systems of first-order differential equations for the development of mathematical models of AC electromechanical converters invariant to the rotational speed of the coordinate system.*

Findings. *The reviewed mathematical models of electromechanical converters made it possible to reproduce their steady-state and dynamic processes with the same accuracy as models in Cartesian coordinates. The use of phase shifts of the resulting vectors relative to each other as state variables for the electromechanical converter allowed for the derivation of mathematical models in which all variables are limited in magnitude and have constant values in the steady-state mode, regardless of the coordinate system's rotational speed. Studies performed using the proposed models indicate that the vector and circular diagrams, which are traditionally used for analyzing the steady-state modes of electromechanical converters, characterize the angular position of some vector variables with an accuracy of a multiple of 2πK.*

Originality. *The proposed mathematical model of AC electromechanical converters is invariant to the rotational speed of the coordinate system, which allows the use of the modules of the resulting vectors of three-phase variables and their phase shifts relative to each other as state variables of electromechanical converters.*

Practical value. *The proposed mathematical models make it possible to obtain the amplitude values of the vector variables, their angular position relative to one another, instantaneous cosφ values (and so on), without additional calculations.*

Keywords: induction motor, resulting vector, mathematical models, polar coordinates, rotational speed.

.

I. INTRODUTION

Mathematical modeling is currently one of the highest priority approaches for determining and investigating the characteristics of various types of electromechanical converters. When mathematically modeling electromechanical processes in an induction motor with a solid rotor, it is necessary to take into account the non-linearity of the ferromagnetic material, the slotting of the cores, and eddy currents in the rotor. Modern simulation programs account for these factors during the calculation of instantaneous states of the electromagnetic field: determining winding flux linkages, losses in the steel and windings, and the electromagnetic torque. Fragments of induction motor equations, in which vector variables are represented by their polar coordinates, are finding increasing application both in the design of automatic control systems for induction electric drives and in the analysis of their dynamic and steady-state modes [1, 2]. Work [3] provides six variants for writing such equations, which describe the processes in an unsaturated squirrel-cage induction motor under generally accepted assumptions [4]. However, equations in polar coordinates have been studied little, and their properties have been insufficiently explored. This limits the application of such equations in engineering practice.

DOI: https://doi.org/10.15588/1607-6761-2025-4-4

II. ANALYSIS OF LAST RESEARCHES

The development and improvement of mathematical models for induction motors (IM) remains a relevant area of research in electrical engineering, as model accuracy directly affects the efficiency of control, diagnostics, and design systems. In recent years, the main focus has shifted from classical models to accounting for nonlinearities, magnetic saturation, temperature effects, and the use of modern identification and simulation methods.

Traditional d-q models, based on generalized motor theory, often assume a linear magnetic circuit. In modern research, the influence of saturation on the dynamics of induction motors is actively investigated. The 'Nonlinear d-q model of an induction motor considering cross-saturation' [5] represents an improved model that uses cubic splines or special functions to describe the dependence of inductances on current. This allows for accurate prediction of transient processes under high load conditions. In [6] proposes a model that includes the temperature dependence of parameters (winding resistances), which is critically important for thermal protection and assessing the service life of the induction motor.

For systems requiring high dynamic accuracy, advanced vector control and direct control models are actively being developed. In [7], the authors focus on improving flux linkage vector observers. The authors modify the classical model to minimize the flux estimation error at low speeds. Work [8] uses a multi-dimensional model to estimate additional losses and torque pulsations caused by non-sinusoidal supply.

To achieve the most accurate analysis of magnetic fields and loss distribution, finite element method (FEM) models are used. Recently, hybrid approaches that combine the speed of d-q models with the accuracy of FEM have become popular. Research in [9] proposes a methodology in which non-linear characteristics obtained using FEM are integrated into the d-q model in the form of tables or approximations, significantly increasing accuracy without substantially slowing down the simulation. The paper [10] discusses modern algorithms (e.g. genetic algorithms or swarm intelligence) for improving the accuracy of model parameter estimation in real time.

Modern electric drive control systems often use models to predict motor behavior several steps ahead (model predictive control, MPC). In [11], the focus is on developing models optimized for digital implementation. Particular attention is paid to the choice of the sampling step and the linearization of nonlinear dependencies to reduce the computational load of the controller. In the article [12] the imperfections of the semiconductor inverter (dead time, PWM delays) are taken into account, integrating them into the general mathematical model of the engine for more accurate prediction.

Accurate mathematical models are needed to develop diagnostic algorithms based on State Observers that compare measured and calculated parameters. The study [13] proposes an extended d-q model, where the stator windings are divided into several sections with the introduction of additional resistance at the fault location. This allows for the simulation of a fault signature (e.g., characteristic current harmonics) for subsequent diagnostics. In [14], the influence of rotor asymmetry on the model parameters is analyzed and adaptive observers are proposed for accurate state tracking even under defect conditions.

The skin effect in deep rotor slots and bars becomes especially important when operating with frequency converters, when the rotor currents have a high frequency. In publication [15], two equivalent rotor windings (internal and external) are used to more accurately reflect the change in rotor resistance and inductance depending on the slip frequency. This is critical for accurate prediction of torque and efficiency over a wide speed range. In the article [16] he demonstrates how improved models that take into account frequency dependence allow for more accurate calculation of additional losses and increase the accuracy of thermal modeling.

An analysis of publications shows that modern research is focused on creating refined, nonlinear, and adaptive mathematical models of induction motors. The primary focus is on improving accuracy by taking into account physical phenomena (saturation, temperature) and integrating complex numerical methods (FEM) into faster dynamic models (d-q). This is critical for the development of high-precision and energy-efficient electric drive systems.

III. FORMULATION OF THE WORK PURPOSE

Development of mathematical models for AC electromechanical converters that are invariant to the rotational speed of the coordinate system, utilizing the moduli of the resulting vectors of three-phase variables and their phase shifts relative to one another as state variables for the electromechanical converters, with the aim of developing new structures for automated induction electric drives.

IV. EXPOUNDING THE MAIN MATERIAL AND RESULTS ANALYSIS

As noted in [4], the most widely used differential equations are those in which the relationship between the electromagnetic torque $\boldsymbol{M_e}$ of the motor and the resulting stator voltage vector $\boldsymbol{U_s}$ is expressed through intermediate vector variables, the stator current $\boldsymbol{i_s}$ and the rotor flux linkage $\boldsymbol{\psi_r}$ (the $\boldsymbol{i_s}$–$\boldsymbol{\psi_r}$ system), or the stator flux linkage $\boldsymbol{\psi_s}$ and the rotor flux linkage $\boldsymbol{\psi_r}$ (the $\boldsymbol{\psi_s}$–$\boldsymbol{\psi_r}$ system).

For the given combinations of vector variables, these equations in polar coordinates have the form for model in $\boldsymbol{i_s}$–$\boldsymbol{\psi_r}$ variables:

$$U_s \cdot cos(\theta_{u_s} - \theta_{i_s}) = r_e\left(T_e \frac{di_s}{dt} + i_s\right) + \ldots$$

$$\ldots + K_r z_p \omega \psi_r \, sin\left(\theta_{i_s} - \theta_{\psi_r}\right) - \ldots$$

$$\ldots - \frac{K_r}{T_r}\psi_r \cos\left(\theta_{i_S} - \theta_{\psi_r}\right), \quad (1)$$

$$\frac{d\theta_{i_S}}{dt} = \frac{U_S \sin\left(\theta_{u_S} - \theta_{i_S}\right)}{r_e T_e i_S} - \omega_k - \ldots$$

$$\ldots - \frac{K_r z_p \omega \psi_r \cos\left(\theta_{u_S} - \theta_{\psi_r}\right)}{r_e T_e i_S} - \ldots$$

$$\ldots - \frac{K_r \psi_r \sin\left(\theta_{i_S} - \theta_{\psi_r}\right)}{T_r r_e T_e i_S}, \quad (2)$$

$$i_S \cos\left(\theta_{i_S} - \theta_{\psi_r}\right) = \frac{1}{K_r r_r T_r}\left(Tr\frac{d\psi_r}{dt} + \psi_r\right), \quad (3)$$

$$\frac{d\theta_{\psi_r}}{dt} = \frac{K_r r_r i_S \sin\left(\theta_{i_S} - \theta_{\psi_r}\right)}{\psi_r} - \omega_k - z_p\omega, \quad (4)$$

$$J\frac{d\omega}{dt} = M_e - M_c, \quad (5)$$

$$M_e = \frac{3}{2}K_r z_p i_S \psi_r \sin\left(\theta_{i_S} - \theta_{\psi_r}\right). \quad (6)$$

- for model in ψ_s–ψ_r variables:

$$U_S \cdot \cos\left(\theta_{u_S} - \theta_{\psi_S}\right) = \frac{r_S}{L'_S}\left(\frac{L'_S}{r_S}\cdot\frac{d\psi_S}{dt} + \psi_S\right) - \ldots$$

$$\ldots - \frac{K_r r_r}{L'_S}\psi_S \cos\left(\theta_{\psi_S} - \theta_{\psi_r}\right), \quad (7)$$

$$\frac{d\theta\psi_S}{dt} = \frac{K_r r_S}{L'_S}\frac{\psi_r}{\psi_S}\sin\left(\theta_{\psi_S} - \theta_{\psi_r}\right) - \ldots$$

$$\ldots - \omega_k + \frac{U_S}{\psi_S}\sin\left(\theta_{u_S} - \theta_{\psi_S}\right), \quad (8)$$

$$\psi_S \cos\left(\theta_{\psi_S} - \theta_{\psi_r}\right) = \frac{1}{K_S}\left(\frac{L'_S}{r_r}\frac{d_{\psi_r}}{dt} + \psi_r\right), \quad (9)$$

$$\frac{d\theta_{\psi_r}}{dt} = \frac{K_S r_r}{L'_r}\frac{\psi_S}{\psi_r}\sin\left(\theta_{\psi_S} - \theta_{\psi_r}\right) - \omega_k + z_p\omega, \quad (10)$$

$$J\frac{d\omega}{dt} = M_e - M_c, \quad (11)$$

$$M_e = \frac{3}{2}\frac{K_r z_p}{L'_S}\psi_S\psi_r \sin\left(\theta_{\psi_S} - \theta_{\psi_r}\right). \quad (12)$$

where , U_s, i_s, ψ_s,ψ_r are the magnitudes of the resulting vectors for stator voltage, stator current, stator flux linkage, and rotor flux linkage, respectively; Θ_{Us}, Θ_{is}, $\Theta_{\psi s}$, $\Theta_{\psi r}$ are the angles of the corresponding vectors (angles between the respective vectors and the polar axis); $\acute{\omega}_k$, $\acute{\omega}$ are the angular velocities of rotation of the polar axis and the rotor of the electrical motor; M_e, M_c are the electromagnetic torque of the motor and the static load torque; z_p is the number of pole pairs of the stator winding; J is the total moment of inertia, referred to the motor shaft; L_m, L_s, L_r, r_s, r_r are the parameters of the induction motor circuits, referred to the stator winding; $L_e = (L_s - L_m) + K_r(L_r - L_m)$ is the equivalent leakage inductance of the motor phase; $r_e = r_s + K_r^2 r_r$ is the equivalent active resistance of the motor phase; $L'_s = (1 - K_s K_r) L_s$ and $L'_r = (1 - K_s K_r) L_r$ are stator and rotor leakage inductances; $T_e = L_e / r_e$ and $T_r = L_r / r_r$ are electromagnetic time constants of the motor's main circuit and the rotor circuit; $K_s = L_m / L_s$ and $K_r = L_m / L_r$ are stator and rotor coupling coefficients.

It should be noted, that the derivatives in the second and fourth equations of equation systems (1) and (2) feature the arguments of the resulting vectors as state variables, which are dependent on the position and rotational speed of the polar axis of the coordinate system. The arguments of the trigonometric functions are the differences in the arguments of these vectors, which are independent of the position and rotational speed of the polar axis, and which must be calculated additionally. Furthermore, if the rotational speed of the coordinate system is not synchronized with the rotational speed of the resulting vectors, the variables Θ_{Us}, Θ_{is}, $\Theta_{\psi s}$, $\Theta_{\psi r}$ will increase indefinitely (including when $\acute{\omega}_k=0$). This must be taken into account both when conducting research using such models and when designing control systems for these variables.

Mathematical models of the induction motor are more convenient, when the signals

$$\varphi_{u_S i_S} = \theta_{u_S} - \theta_{i_S}, \quad (13)$$

$$\varphi_{u_S\psi_S} = \theta_{u_S} - \theta_{\psi_S}, \quad (14)$$

$$\varphi_{i_S\psi_r} = \theta_{i_S} - \theta_{\psi_r}, \quad (15)$$

$$\varphi_{\psi_S\psi_r} = \theta_{\psi_S} - \theta_{\psi_r}, \quad (16)$$

characterizing the mutual angular position of the corresponding vectors relative to each other are used as state variables.

To obtain such models, the following equation is introduced in addition to equation systems (1)-(6) and (7)-(12):

$$\frac{d\theta_{u_S}}{dt} = \omega_{u_S} - \omega_k, \quad (17)$$

where $\acute{\omega}_{Us}$ is the rotational speed of the resulting stator voltage vector relative to the stationary axis in space.

In this case, $\acute{\omega}_{Us}$ is the frequency of the three-phase voltage supplying the motor.

If we subtract the equations (2) and (8) from equation (17) and also subtract the equations (4) and (10) from equation (2) and (8). And we perform the substitution of variable from (13)-(16) into these equations, we can represent the mathematical models of the induction motor in

the following form:

- for the model in $\boldsymbol{i_s}$–$\boldsymbol{\psi_r}$ variables

$$U_s \cos\left(\varphi_{u_s i_s}\right) = r_e\left(Te\frac{di_s}{dt} + i_s\right) + \ldots$$

$$\ldots + K_r z_p \omega \psi_r \sin\left(\varphi_{i_s\psi_r}\right) - \frac{K_r}{T_r}\psi_r \cos\left(\varphi_{i_s\psi_r}\right), \quad (18)$$

$$\frac{d\varphi_{u_s i_s}}{dt} = \frac{U_s \sin\left(\varphi_{u_s i_s}\right)}{r_e T_e i_s} - \omega_{u_s} - \ldots$$

$$\ldots - \frac{K_r z_p \omega \psi_r \cos\left(\varphi_{i_s\psi_r}\right)}{r_e T_e i_s} - \frac{K_r \psi_r \sin\left(\varphi_{i_s\psi_r}\right)}{T_r r_e T_e i_s}, \quad (19)$$

$$i_s \cos\left(\varphi_{i_s\psi_r}\right) = \frac{1}{K_r r_r T_r}\left(T_r \frac{d\psi_r}{dt} + \psi_r\right), \quad (20)$$

$$\frac{d\varphi_{i_s\psi_r}}{dt} = \frac{K_r r_r i_s \sin\left(\varphi_{i_s\psi_r}\right)}{\psi_r} - \omega_{u_s} z_p \omega, \quad (21)$$

$$J\frac{d\omega}{dt} = M_e - M_c, \quad (22)$$

$$M_e = \frac{3}{2} K_r z_p i_s \psi_r \sin\left(\varphi_{i_s\psi_r}\right). \quad (23)$$

- for the model in $\boldsymbol{\psi_s}$–$\boldsymbol{\psi_r}$ variables

$$U_s \cos\left(\varphi_{u_s\psi_s}\right) = \frac{r_s}{L'_s}\left(\frac{L'_s}{r_s}\frac{d\psi_s}{dt} + \psi_s\right) - \ldots$$

$$\ldots - \frac{K_r r_s}{L'_s}\psi_r \cos\left(\varphi_{\psi_s\psi_r}\right), \quad (24)$$

$$\frac{d\varphi_{u_s\psi_s}}{dt} = \frac{K_r r_s}{L'_s}\frac{\psi_r}{\psi_s}\sin\left(\varphi_{\psi_s\psi_r}\right) + \ldots$$

$$\ldots + \omega_{u_s} - \frac{U_s}{\psi_s}\sin\left(\varphi_{u_s\psi_s}\right), \quad (25)$$

$$\psi_s \cos\left(\varphi_{\psi_s\psi_r}\right) = \frac{1}{K_s}\left(\frac{L'_r}{r_r}\frac{d\psi_r}{dt} + \psi_r\right), \quad (26)$$

$$\frac{d\varphi_{\psi_s\psi_r}}{dt} = \frac{K_s r_r}{L'_r}\frac{\psi_s}{\psi_r}\sin\left(\varphi_{\psi_s\psi_r}\right) - \omega_{u_s} + z_p\omega, \quad (27)$$

$$J\frac{d\omega}{dt} = M_e - M_c, \quad (28)$$

$$M_e = \frac{3}{2}\frac{K_r z_p}{L'_s}\psi_s \psi_r \sin\left(\varphi_{\psi_s\psi_r}\right) \quad (29)$$

The mathematical models (18)-(23) and (24)-(29) are invariant to the rotational speed of the coordinate system, and the variables $\boldsymbol{\acute{\omega}_U}$, $\boldsymbol{U_s}$, $\boldsymbol{i_s}$, $\boldsymbol{\psi_s}$, $\boldsymbol{\psi_r}$, $\boldsymbol{\phi_{Us\psi s}}$, $\boldsymbol{\phi_{Us\psi r}}$ are limited in magnitude and have constant values in the steady-state mode. Mathematical models of the induction motor for any other combination of resulting vectors can be obtained in a similar manner. The variables $\boldsymbol{\phi_{sIs}}$($\boldsymbol{\phi_{Us\psi s}}$), represent the phase shift between the stator voltage vector $\boldsymbol{U_s}$ and the stator current vector i_s (the rotor flux linkage vector $\boldsymbol{\psi_r}$). The derivative of $\boldsymbol{\phi_{UsIs}}$($\boldsymbol{\phi_{Us\psi s}}$) with respect to time is the rate of change of the phase shift, or, in other words, the absolute slip of the resulting stator current vector (rotor flux linkage vector) relative to the resulting voltage vector.

In view of the foregoing, the structural diagrams (fig.1 and fig.2) of the induction motor correspond to equations (18)-(23) and (24)-(29).

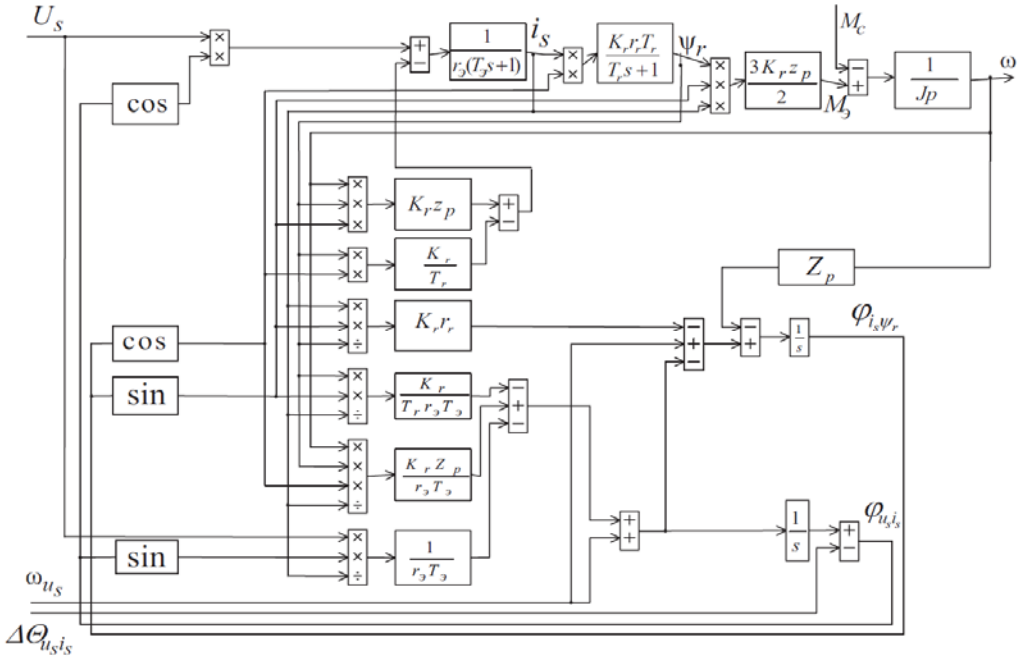

Figure 1. Computational model of an induction motor in i_s–ψ_r variables

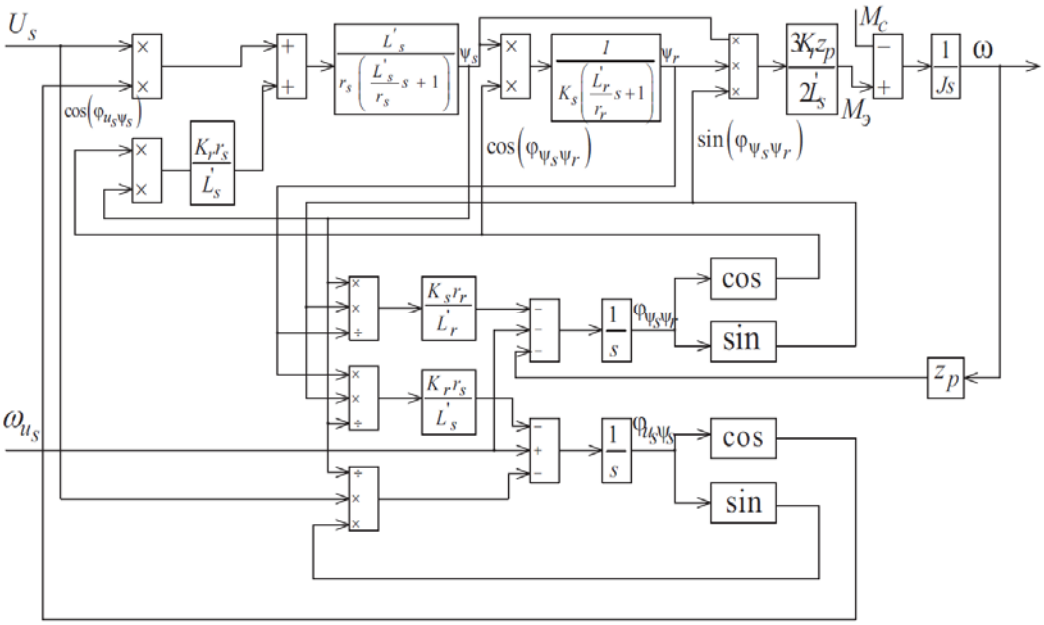

Figure 2. Computational model of an induction motor in ψ_s–ψ_r variables

However, difficulties arise in the modeling process concerning the operability of such models, due to the presence of a division by zero regime. These difficulties are easily eliminated by introducing negligibly small initial values for the moduli (magnitudes) of the vector variables.

In accordance with these diagrams, studies of all possible operating modes for a large number of 4A series induction motors were performed using the Matlab application software package. Processes were investigated in motors of various power ratings, nominal parameters, numbers of pole pairs, etc. The studies were carried out in comparison with the results obtained using models in Cartesian coordinates (*d-q* models).

As an example, fig. 3 – fig. 8 shows the graphs of the change in the state variables of a 4A132M4U3 induction motor during a direct start at nominal supply network parameters.

The conducted studies indicate that by using equations (18)-(23) and (24)-(29) and the computational model corresponding to fig.1 and fig.2, the electromagnetic torque and the rotational speed of the rotor shaft of the induction motor can be calculated with the same accuracy as when using equations in Cartesian coordinates (fig. 3, fig. 4).

Oscillogram in fig. 5 characterizes the instantaneous amplitude values of the stator winding phase currents, and oscillogram in fig. 6 shows the instantaneous values of the amplitude of the rotor winding flux linkage space wave.

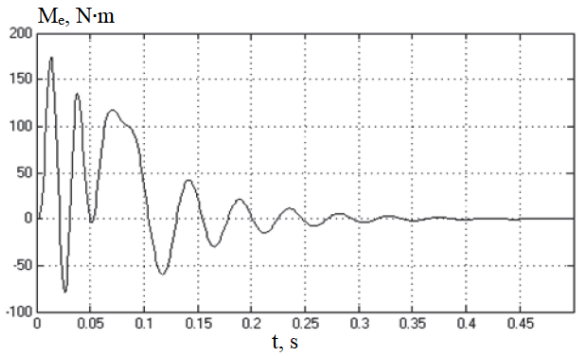

Figure 3. Oscillogram of the electromagnetic torque of the 4A132M4U3 induction motor during a direct start

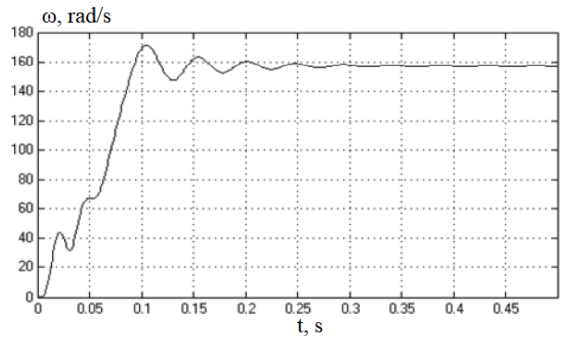

Figure 4. Oscillogram of the angular velocity of the 4A132M4U3 induction motor during direct start

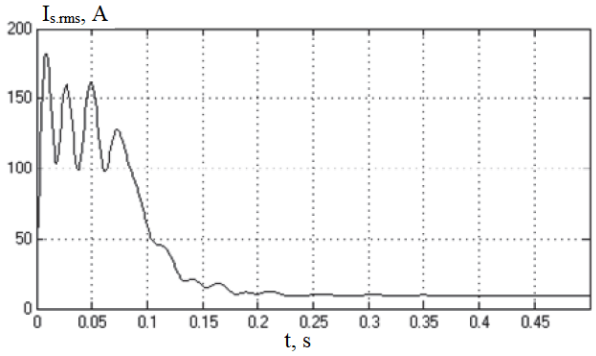

Figure 5. Oscillogram of the change in the RMS value of the stator current of the 4A132M4U3 induction motor during direct start

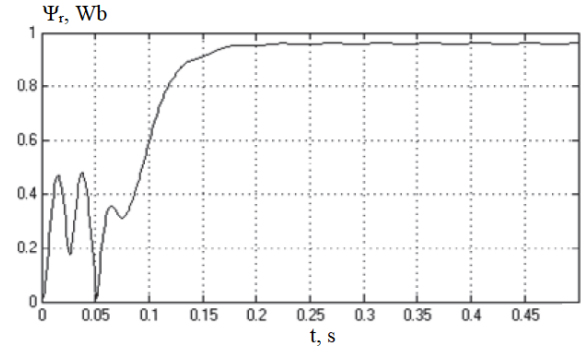

Figure 6. Oscillogram of the change in the rotor winding flux linkage of the 4A132M4U3 induction motor during direct start

The curve in fig. 7 illustrates the phase shifts between the phase voltages and currents of the stator winding, which do not exceed the value of π/2 in the steady-state mode. The phase shifts between the stator current vector and the rotor flux linkage vector (fig. 8) can exceed several revolutions and are characterized by the relationship $\phi_{Is\psi r}=2\cdot\pi\cdot K+\Delta\ \phi_{Is\psi r}$.

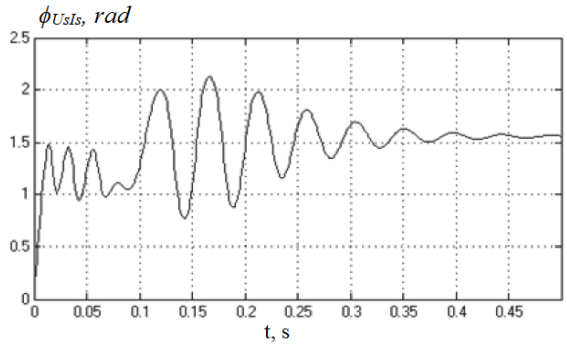

Figure 7. The value of the phase shift between the stator voltage and current vectors of the 4A132M4U3 induction motor during direct start

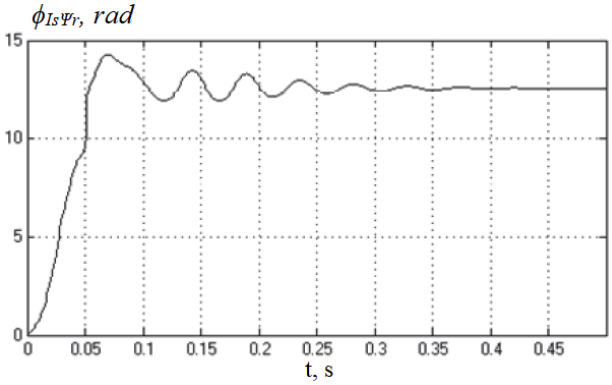

Figure 8. The value of the phase shift between the stator current vector and the rotor flux linkage vector of the 4A132M4U3 induction motor during direct start

Where, K is an integer whose value is determined by the motor type and parameters, as well as the algorithm for forming its dynamic modes; $\Delta\ \phi_{Is\psi r}$ is the angular displacement less than one revolution.

The presented equations and structural diagrams yield a new set of induction motor state variables (moduli and phase shifts of the resulting vectors), which can serve as a basis for creating new, competitive structures for automatic control systems of induction electric drives, relative to existing ones.

When conducting research using the developed models, information regarding the angular position and rotational speed of the coordinate system is not required.

V. CONCLUSION

The mathematical models of the induction machine were reviewed, which made it possible to reproduce its steady-state and dynamic processes with the same accuracy as models in Cartesian coordinates.

The use of phase shifts of the resulting vectors relative to each other as the state variables of the induction machine allowed for the creation of mathematical models in which all variables are limited in magnitude and have constant values in the steady-state mode, regardless of the coordinate system's rotational speed.

The operability of the presented mathematical models, when organizing the computational process in digital form, is ensured by introducing negligibly small initial values for the magnitudes of the vector variables.

Studies performed using the proposed models indicate that the vector and circular diagrams, traditionally used for analyzing the steady-state modes of the induction machine, characterize the angular position of certain vector variables with an accuracy of a multiple of 2πK, where K is an integer.

The proposed mathematical models make it possible to obtain the amplitude values of the vector variables, their angular position relative to each other, the instantaneous values of cosφ, etc., without additional calculations.

REFERENCE

[1] Wang, W., & Xu, Z. (2021). Real-Time Parameter Identification of Induction Motor Based on Particle Swarm Optimization Algorithm. IEEE Transactions on Industrial Electronics, 68(3), 1957–1967.

[2] Messaoudi, M., Kherraz, M., & Benamrouche, N. (2023). Genetic Algorithm-Based Induction Motor Parameter Identification for Enhanced Sensorless Control. Electric Power Components and Systems, 51(4), 512–524.

[3] Hassan, F., & Al-Tameemi, I. M. (2018). Online Parameter Estimation of Induction Motors Using Recursive Least Squares with Temperature Compensation. IET Electric Power Applications, 12(6), 756–764.

[4] Novikov, A. S., & Cherkasov, A. V. (2020). A Nonlinear d-q Model of Induction Machine Including Cross-Saturation for High Dynamic Accuracy Control. Journal of Electrical Engineering, 71(5), 329–338.

[5] Neacsu, D. O. (2025). AC/DC and DC/AC Current Source Converters. In Switching Power Converters (3rd ed.). CRC Press. DOI: https://doi.org/10.1201/9781003592020-21

[6] Levi, E., Vuckovic, A., & Cvetkovic, I. (2017). Analysis of Induction Motor Dynamic Performance Using Vector Control and d-q Models with Saturation. IEEE Transactions on Energy Conversion, 32(1), 16–25.

[7] Zhong, L., & Rahman, M. A. (2015). Direct Torque Control (DTC) of Induction Motor Using Space Vector Modulation and Saturation Compensation. Electric Power Systems Research, 122, 1–9.

[8] Nouri, B., Kocewiak, L. H., Shah, S., Koralewicz, P., Gevorgian, V., & Sørensen, P. (2022). Generic Multi-Frequency Modelling of Converter-Connected Renewable Energy Generators Considering Frequency and Sequence Couplings. IEEE Transactions on Energy Conversion, 37(1), 547–559. https://doi.org/10.1109/TEC.2021.3101041

[9] Toma, R., Popescu, M., & Boicea, V. A. (2021). Hybrid Modeling of Induction Motors: Integrating FEM-Derived Saturation Characteristics into d-q Model. IEEE Transactions on Magnetics, 57(11), 1–9.

[10] Renneboog, J., Hameyer, K., & Belmans, R. (2019). Accurate Iron Loss Prediction in Induction Machines Using Finite Element Analysis and Loss Separation. IET Electric Power Applications, 13(2), 273–281.

[11] Choi, H. S., & Kim, Y. H. (2023). Improved Accuracy of Transient Analysis in Induction Motor using Tabular Representation of Non-Linear Inductances from FEM. Applied Computational Electromagnetics Society Journal, 38(5), 450–459.

[12] Milano, F. (2010). AC/DC Devices. In Power System Modelling and Scripting. Springer Berlin Heidelberg. DOI: https://doi.org/10.1007/978-3-642-13669-6_18.

[13] Bortolotto, M., Sadowski, N., & Bastos, J. P. (2016).

Thermal Model for Prediction of Winding Resistance and Temperature in Induction Motors for Protection Purposes. IEEE Transactions on Industry Applications, 52(5), 3687–3695.

[14] Mohamadian, M., & Varma, R. K. (2018). Application of Polar Coordinate Equations for Dynamic Simulation of Unsaturated Induction Machines. International Journal of Electrical Engineering & Technology, 9(3), 20–30.

[15] Chaudhary, P., & Singh, Y. P. (2024). Modeling of Solid Rotor Induction Motors Incorporating Eddy Current Effects and Non-Linear Magnetization. Energy Conversion and Management, 303, 118123.

[16] Ruiz Florez, H. A., López, G. P., Jaramillo-Duque, Á., López-Lezama, J. M., & Muñoz-Galeano, N. (2022). A Mathematical Modeling Approach for Power Flow and State Estimation Analysis in Electric Power Systems through AMPL. Electronics, 11(21), Article 3566. DOI: https://doi.org/10.3390/electronics11213566

Received 09.10.2025;
Accepted 17.11.2025;
Published 26.12.2025;

ВДОСКОНАЛЕННЯ МАТЕМАТИЧНИХ МОДЕЛЕЙ ЕЛЕКТРОМЕХАНІЧНИХ ПЕРЕТВОРЮВАЧІВ ЗМІННОГО СТРУМУ

ГІЗЕНКО М.Д. аспірант кафедри електричних та електронних апаратів, Національний університет «Запорізька політехніка», Запоріжжя, Україна, ORCID: https://orcid.org/0009-0006-8584-6022, e-mail: nhizenko.freshcode@gmail.com;

ЛУКАШ Д.В. аспірант кафедри електричних та електронних апаратів, Національний університет «Запорізька політехніка», Запоріжжя, Україна, ORCID: https://orcid.org/0009-0002-9191-5179, e-mail: lukash.dmitry.v@gmail.com;

ШВЕД А.С. аспірант кафедри електричних та електронних апаратів, Національний університет «Запорізька політехніка», Запоріжжя, Україна, ORCID: https://orcid.org/0009-0000-6822-1190, e-mail: gemix555@gmail.com;

Мета роботи. *Розробка математичних моделей електромеханічних перетворювачів змінного струму інваріантних до швидкості повороту системи координат з використанням в якості змінних стану електромеханічних перетворювачів модулів результуючих векторів трифазних змінних та їх фазових зрушень відносно один одного для розробки нових структур автоматизованих асинхронних електроприводів.*

Методи дослідження. *методи математичного моделювання електромеханічних систем, чисельні методи щодо вирішення системи диференційних рівнянь першого порядку для розробки математичних моделей електромеханічних перетворювачів змінного струму інваріантних до швидкості повороту системи координат.*

Отримані результати. *Розглянуті математичні моделі електромеханічних перетворювачів, які дозволили відтворювати усталені та динамічні процеси з тією ж точністю, що й моделі в декартових координатах. Використання в якості змінних стану електромеханічного перетворювача фазових зрушень результативних векторів щодо один до одного дозволило отримати математичні моделі, в яких всі змінні обмежені за величиною і в усталеному режимі мають постійні значення незалежно від швидкості обертання координатної системи. Виконані за допомогою запропонованих моделей дослідження свідчать про те, що векторні та кругові діаграми, які використовуються для аналізу встановлених режимів електромеханічних перетворювачів, характеризують кутове положення деяких векторних змінних з точністю кратної* $2\pi K$.

Наукова новизна. *Запропонована математична модель електромеханічних перетворювачів змінного струму інваріантних до швидкості повороту системи координат, яка дозволяє застосувати модулі результуючих векторів трифазних змінних та їх фазових зрушень відносно один одного в якості змінних стану електромеханічних перетворювачів.*

Практична цінність. *Запропоновані математичні моделі дозволяють без додаткових обчислень отримувати амплітудні значення векторних змінних, їх кутове положення щодо один одного, миттєві значення* $\cos\varphi$, *тощо.*

Ключові слова: асинхронний двигун, результуючий вектор, математичні моделі, полярні координати, швидкість обертання