УДК 62-523, 681.5

AUTOMATED METHODOLOGY OF CALCULATING PARAMETERS FOR NON-TRADITIONAL TECHNOLOGY OF HEATING MODE OF HYDRO-STORAGE POWER PLANT STATION

OLISHEVSKYI I.H. PhD student and assistant of the Department of Information Security and Telecommunications, Dnipro University of Technology, Dnipro, Ukraine, e-mail: olishevskiyih@gmail.com;

GUSEV O.YU. PhD, Professor of the Department of Information Security and Telecommunications, Dnipro University of Technology, Dnipro, Ukraine, e-mail: gusev1950@ukr.net;

OLISHEVSKYI H.S. PhD, Associate Professor of the Department of Electric Power Engineering, Dnipro University of Technology, Dnipro, Ukraine, e-mail: olishevskiyg@ukr.net;

Purpose. *Justification of the rational parameters of heat pumps and heat accumulators to ensure the efficient operation of the hydro storage power plant (HSPP) in the heating mode. Development of an automated methodology for calculating rational parameters for a complex system of a hydro storage power plant operating in heating mode.*

Methodology. *Mathematical analysis and modeling.*

Findings. *Using the developed automated calculation method, it was analyzed and determined that passing through the heat pump the full flow of water passing through the hydro unit is impractical and ineffective, because the energy consumption in the heat pump compressor is many times higher than the consumption of the hydro unit in pumping mode, which devalues the proposed measure as an energy-saving measure.*

The use of a heat pump and a heat accumulator at the hydro storage power plant for hot water supply needs will save a third of conventional fuel costs compared to a boiler unit.

The developed automated technique allows to calculate the limit and rational values of design and operating parameters of the heat pump and heat accumulator, which ensure the heating mode of operation of the hydro storage power plant to meet the needs of hot water supply.

Originality. *An automated methodology for calculating the parameters of a complex system has been developed for the hydro storage power plant operating in heating mode. The concept of the maximum heat capacity of the hot water supply of the heat pump* Q_{gr} *is introduced. The concept of the rational heat capacity of the hot water supply of the heat pump* Q_{rac} *is introduced. In addition to the maximum heat capacity and the rational heat capacity modes, the developed method allows you to calculate all the parameters of the heat pump and heat accumulator, which provide the heating mode of the hydro storage power plant, for arbitrary values of the thermal power of hot water supply, with further comparison and analysis of the investigated modes and the selection of the most promising one.*

Practical value. *The technology of using a heat pump and a heat accumulator to transfer the operation of the hydro storage power plant to the heating mode (hot water supply of residential buildings) is substantiated. The possibility of saving conditional fuel when applying the proposed technology is proven.*

Keywords: heat pump; heat accumulator; automation; energy saving; hydro storage power plant; thermal power.

I. INTRODUTION

The modern energy system of Ukraine is a flexible system consisting of generating and consuming components, which must be in continuous dynamic balancing. That is, it is necessary to constantly maneuver the relevant generating capacities, as well as consumer loads. The generating component is a set of power plants, different in design and principles of operation: nuclear, thermal, thermal power plants, hydro- and hydro-accumulating, solar, wind. At the moment, modern thermal power stations of average power (up to 200 MW) and hydro and, especially, hydro-accumulating stations (HPS) are the most suitable for maneuvering. Gas turbine plants, which are very efficient in terms of maneuvering, unfortunately do not have sufficient distribution in Ukraine today. At the same time, the energy system of Ukraine has significant problems with a shortage of not only electrical but also thermal energy, especially in the cold season.

Therefore, it is necessary to use various technical improvements and non-traditional measures regarding the existing energy equipment in order to increase the maneuverability of the use of the existing generating capacities and the possibilities of energy-efficient transformation of some types of energy into others. This refers to mutual transformations of thermal and electrical energy, especially in their joint production.

II. ANALYSIS OF RESEARCH AND PUBLICATIONS

In previous studies, the authors considered a number of non-traditional technologies for useful transformations of electrical energy into thermal energy and thermal

© Олішевський І.Г., Гусєв О.Ю., Олішевський Г.С ., 2023
DOI 10.15588/1607-6761-2023-1-4

energy into electrical energy, for various power plants. At the same time, a heat pump (HP) was used in all investigated energy-efficient technologies.

The principle of operation of the heat pump consists in the extraction of heat from various low-potential (low-temperature) energy sources with further transformation into high-temperature thermal energy and its transfer to the consumer. At the same time, energy is used to drive the heat pump compressor.

Thus, according to the results of research [1], carried out with the help of the developed appropriate methodology, the feasibility of using a heat pump in the thermal circuit of a condensing power plant (CPP) as a preliminary water heater after the turbine condenser was substantiated (Fig. 1).

.According to the developed automated method, the rational temperature of the feed water preheating was determined under the conditions of maximum economy of conventional fuel, taking into account the energy consumption of the heat pump compressor.

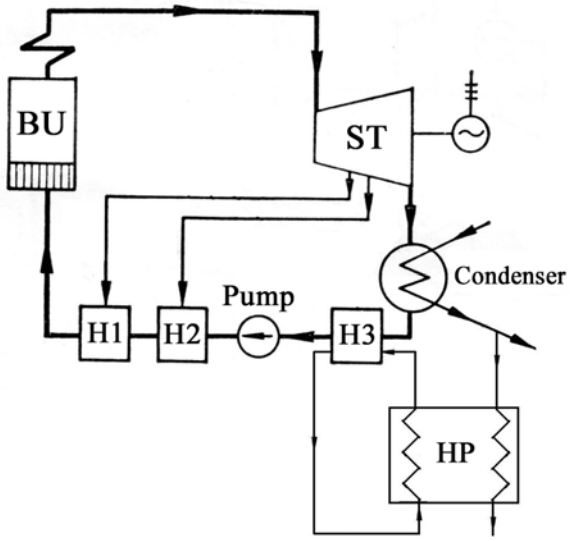

Figure 1. Scheme of application of the heat pump at the CPP: BU – boiler unit; H1, H2, H3 – water heaters; ST – Steam Turbine; HP – Heat Pump

For the conditions of the Kryvorizka CPP power unit with a condensing steam turbine of the K-300-240 KhTGZ type, the rational value of the water heating temperature in the heat pump was 82 °C, which ensured the maximum possible fuel saving of 6% [1].

Next, the possibility of using a heat pump in the heat circuit of the CPP as a water heater in the hot water supply system for domestic consumers was investigated (Fig. 2), which allowed the power plant to operate actually in the heating mode.

In this work, the rational mode of operation of the combined CPP+HP system was justified on the example of the already known power unit of the Kryvorizka CPP. According to the research results, the coefficient of heat utilization for this system acquired a rational value of 78%, and the energy conversion coefficient was 7.2, which corresponds to a high level of efficiency of the HP [2].

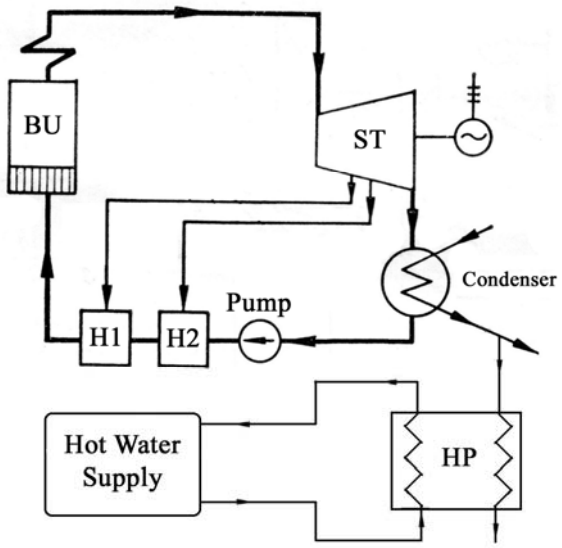

Figure 2. The scheme of application of the heating mode at the CPP: BU – boiler unit ; H1, H2 – water heaters before the BU; ST – Steam Turbine; HP – Heat Pump

Next, the effectiveness of the heat pump use, which utilizes the thermal energy of a power transformer, for various options of power plants was investigated. As a result, it was determined that the most rational scheme of using a heat pump in the system of utilization of thermal emissions of a power transformer TDNM - 160 MVA/330 kV is a heating scheme (energy conversion coefficient greater than 13), which has clear advantages from the point of view of saving energy resources and requires significantly lower capital and operating costs compared to other schemes. At the same time, the inefficiency of the use of the heat pump in micro-steam plants was proved [3].

The effectiveness of multi-stage heat pump installations was investigated in order to reduce the total energy consumption when reaching the specified heat capacity. The rationality of using a two-stage heating system, which provides an economy of 12% of conventional fuel, compared to one heat pump, was proven [4]. Schemes with more than four heat pumps have been proven to be less efficient.

The papers [5], [8] consider the main theoretical provisions on which the calculations in the study are based.

The source [6] defines the main legal, economic and organizational principles of activity at facilities in the field of heat supply and regulates relations related to the production, transportation, supply and use of thermal energy for the purpose of ensuring the energy security of Ukraine, increasing the energy efficiency of the functioning of heat supply systems, creating and

improving the heat energy market and protecting the rights of consumers and workers in the field of heat supply.

In work [7], an overview of heat pumps used in global practice was carried out. The state of the market of heat pumps in the world and Ukraine was studied, as well as the factors that slow down their implementation, types of heat pumps, schemes and principles of operation, sources of thermal energy of heat pump installations were considered. The advantages of heat pump installations over natural energy sources and the prospects of their use in Ukraine are also shown.

The paper [9] analyzed the energy efficiency of vapor compression heat pumps with electric and cogeneration drives. Effective and valid modes of operation of heat pumps with electric and cogeneration drives are determined, taking into account energy losses during the generation, supply and transformation of electric energy.

The paper [10] described ways to improve energy efficiency standards on the example of Korea, with the aim of increasing the level of investments in this area. Implementation of energy-saving technologies in various spheres of life.

In [11] we see the following results. Heat recovery of low pressure steam in steam condenser of thermal power plant was attractive because of its great economy and environmental value. This paper reported the experimental investigation results on the application of a heat pump water heater (HPWH) using low pressure steam in steam condenser as heat source. The working principles and features of the prototype heat pump were introduced. The effects of various parameters, including water flow rate and inlet temperature of heat pump condenser were investigated. Influence of vacuum pump on HPWH was also discussed. Results show that performance of HPWH is governed strongly by the change of water flow rate and inlet water temperature of heat pump condenser and vacuum pump. Maximum outlet water temperature of the test HPWH is 65°C and the maximum coefficient of performance (COP) is 4.5.

The work [12] presents a computationally cost-effective numerical model that successfully simulates a heat pump water heater (HPWH) under typical working conditions of dwellings. The model's main components are a stratified tank and the heat-pump unit. Both systems are coupled, since a good prediction of water temperature is needed to predict accurately the heat-pump performance. Ten thermocouples measured the tank wall temperature. Measurements and simulations were performed under challenging conditions of a heavy stratification. The 190 L tank stratification was successfully modeled employing a 1D model, experimentally adjusted by three tapping cycles, with 6 × 22, 6 × 33, and 3 × 33 L consumptions, covering flowrates of 4 and 6 L/min. Water temperature is obtained with an uncertainty of 2.6 °C while the heat-pump was ON. A black box model has been used to obtain the heat-pump performance out of the external and condenser temperatures. For the analyzed days, the COP estimation presents an uncertainty of only 5.1%. Finally, an application example is included. It was used to simulate six tapping cycles of the European standard for heat pump water heaters testing (EN 16147). The results show the possibilities for heat-pump manufacturers of applying this calibrated model to predict the performance of HPWHs under different conditions.

The paper [13] is an advanced experimental rig for heat pump water heaters. The performances of both a phase change heat-storage-type heat pump water heater (Type A) and a conventional heat pump water heater (Type B) were tested and compared according to GB/T 23137-2008 using the experimental rig. The results showed that the existence of phase transition temperature platform enabled the phase change heat-storage-type heat pump heater run longer and more steadily. When the same hot water heat capacity obtained, the volume of the accumulator in the Type A water heater accounted for about 56.9% of that of the water tank in the Type B water heater, which could save the overall size of water heater significantly and therefore promote the wide application of energy-saving heat pump water heaters.

The work [14]. A survey for water heater in urban residential buildings is carried in Wuhan. The results show that more than 40% subjects use solar energy water heat. More than 20% subjects point out the energy consumption of water heater should be decreased. There are about 24.8% subjects take initial cost as the first place when they chose water heater. 44.2% subjects know about heat pump water heater, but they could not buy it if the initial cost is too high. There are 84% subjects could select heat pump water heater when the cost is no more 20% high than the average price of the common water heaters. Moreover, the energy consumptions of residential water heaters are also investigated.

An experiment was carried out in work [15].The performance parameters of the WSHPWH system were analyzed at different evaporator water fluxes. The heating time decreased as the evaporator water flux increased. As suggested by the condenser shell and tube side temperature at different evaporator water fluxes, the condenser is inefficient. When attaining the same temperature, the exergy efficiency of the condenser was lower than those of the other equipment. Thus, it is essential to reduce its energy destruction when the heating efficiency of the WSHPWH system is improved.

In the study [16], regulation systems that can be used for our development are considered.

From the reviewed studies, we can conclude that the use of heat pumps is not a panacea for all energy saving measures, but requires conscientious research and justification in each specific case.

Based on the listed studies, an idea was proposed regarding the introduction of non-traditional technology of applying the heating mode of operation of the gas

station for the needs of hot water supply.

III. FORMULATION OF THE WORK PURPOSE

Justification of the rational parameters of the heat pump and heat accumulator to ensure the efficient operation of the hydro storage power plant in the heating mode. Development of an automated methodology for calculating rational parameters for a complex system of the hydro storage power plant operating in the heating mode.

IV. EXPOUNDING THE MAIN MATERIAL AND RESULTS ANALYSIS

The technology of applying the heating mode of operation of the HSPP for the needs of hot water supply (HWS) was investigated. To implement this idea, it was decided to use a heat pump (HP), as well as, taking into account the peculiarities of the operation mode of the HSPP, a heat accumulator (HA). That is, when the hydro storage power plant is operating in pumping mode, the HP takes low-potential thermal energy from part of the pumped water flow and heats water for consumers in the HA (Fig. 3).

The HSPP operates in two modes: pumping mode, consuming waste energy from nuclear and thermal power stations during low-load nighttime, when water is pumped from the lower to the upper catchment, and also in turbine mode, when water is discharged from the upper reservoirs to the lower ones in hours of maximum electricity consumption in the system. At the same time, more energy is consumed in the pumping mode than is produced in the turbine mode, which is reflected in the values of the HSPP efficiency.

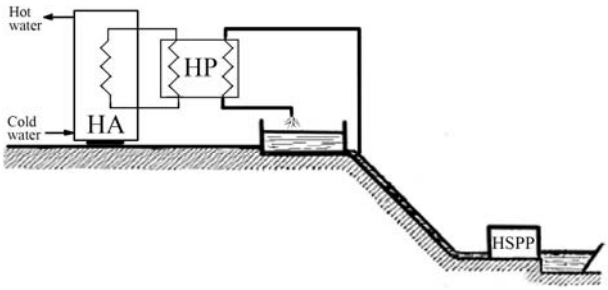

Figure 3. Scheme of the heating mode application at the hydro storage power plant

HP is a steam-compressor unit that operates according to the main refrigeration cycle. For this technology, on the basis of the p, i diagram of the selected refrigerant (Freon-11), the functions of changing the parameters of the refrigeration cycle from the heat capacity of the condenser and the condensation temperature of the refrigerant at the evaporation temperature of the refrigerant of 2 °C were determined.

As a result of the periodic and intermittent nature of the HSPP operation in pumping mode, HA was involved. As TA, a displacing liquid heat accumulator based on water was used. It is cheap enough, technological in production, reliable and safe in operation, and affordable in terms of the materials and substances used.

The RONT-B-675 hydraulic unit installed at the Kanivska GA-ES was accepted as the research object. The power of this unit in generator mode is 250 MW (efficiency 88%), and in pump mode 260 MW (efficiency 75%).

The water in the HA is heated from 5 to 60 °C (for the cold period). Accordingly, the refrigerant condensation temperature is set at 65 °C.

The automated methodology of calculating the parameters of the HSPP complex system operating in the heating mode includes the following algorithm of actions:

1. Assignment of capacities according to the main modes of the hydro unit, the geometric pressure of the station, the initial and final temperatures of the water that gives heat to the HP and water in the HA, physical parameters of water and refrigerant, technical parameters of heat pumps.

2. Formation of the functions of changing parameters of the refrigerating cycle from the heat capacity of the condenser and the condensation temperature of the refrigerant for constant evaporation temperatures, necessary for modeling the operation of heat pumps.

3. Determination and analysis of energy parameters of HP operation for the maximum possible flow of water through the hydraulic unit.

4. Formation of the dependence function of the conventional fuel total consumption by the hydraulic unit in pumping mode and the HP compressor and the function of the dependence of the conventional fuel total consumption for the generator mode and the boiler on the thermal power of the HWS system (condenser of the HP).

5. Determination of the limit value of the HWS capacity and the corresponding HP and HA parameters.

6. Formation of the dependence function of the sum of the hydraulic unit capacities in pumping mode and the HP compressor drive on the thermal power of the HWS system (HP condenser). The formation of the dependence function of the sum of the hydro unit power for the generator mode and the thermal power of the HP on the thermal power of the HWS system (condenser of the HP).

7. Determination of the rational value of the HWS capacity and the corresponding parameters of HP and HA.

8. Determination of HP and HA parameters for an arbitrary value of HWS capacity.

9. Analysis and comparison of the HP and HA parameters obtained above for different values of the HWS capacity and the selection of a more profitable heating operation mode of the HSPP.

According to this technology, the operation of the RONT-B-675 hydrounit in the heating mode for various heat loads of the hot water system was investigated.

First, the maximum thermal power of the HP, which

can be obtained from the full flow of water passing through the hydro unit (3.337 GW), as well as the power of the compressor drive, which will ensure this mode (979 MW), is determined. Comparing this value with the power of the hydro unit in pumping mode (260 MW), we can conclude that it is not appropriate for the heat pump to use the energy of the entire flow of pumped water, because there is no need for such a large amount of heat, and the cost of the HP drive is 3.7 times exceed the costs of the hydraulic unit in pumping mode. That is, the meaning of this energy-saving measure is lost.

Therefore, it was decided to substantiate the marginal and rational values of thermal capacities of HP, which would improve the existing system, and not transform it into a completely different one.

The concept of the ultimate heat capacity HWS (HP) $Q_{гр}$ is proposed. This is the power at which the total consumption of conventional fuel for the hydraulic unit in pumping mode and the HP compressor will be equal to the total consumption of conventional fuel for the generator mode and the boiler unit (BU). Then, in order to calculate this maximum heat capacity, two functions of the corresponding total costs of conventional fuel were formed depending on the heat capacity of the HWS system and their combined solution was performed, which is graphically displayed (Fig. 4).

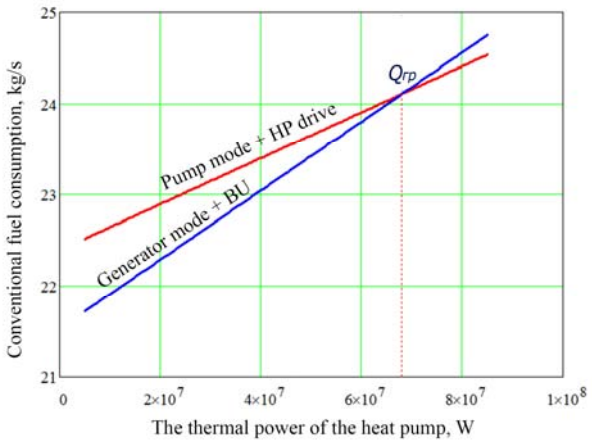

Figure 4. Determination of the maximum heat capacity of the HWS

For our case, under the described conditions and in accordance with the methodology, the maximum heat capacity of the HWS was determined, above which it is impractical to rise. It is equal to 68 MW, and the corresponding power of the HP compressor will be 20 MW, the volume of TA is 5509 m3, the number of consumers is 55094 people, the economy of conditional fuel in comparison with BU is 33%.

The concept of rational thermal power of HWS (HP) $Q_{рац}$ was introduced. This is the power at which the sum of the power of the hydraulic unit in pumping mode and the HP compressor drive will be equal to the sum of the power of the hydro unit in generator mode and the thermal power of the HP. To calculate this rational heat capacity, two functions of the corresponding total capacities were formed depending on the heat capacity of the domestic hot water system and their combined solution was performed, which is graphically displayed (Fig. 5).

For our case, under the described conditions and in accordance with the methodology, the rational heat capacity of the hot water heater, which is the most convenient to provide, was determined. It is equal to 14 MW, and the corresponding power of the TN compressor will be 4 MW, the volume of the HA is 1146 m3, the number of consumers is 11460 people, and the conventional fuel economy in comparison with the BU is 33%.

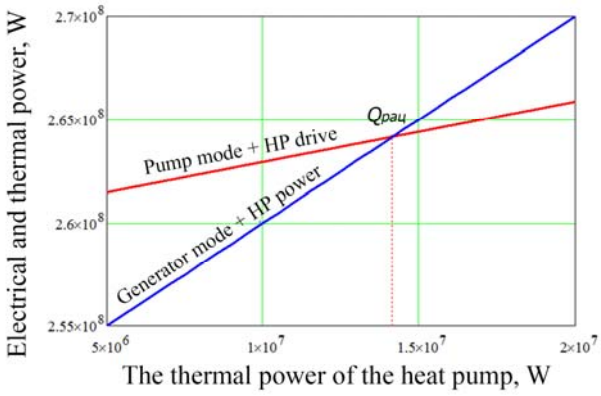

Figure 5. Determination of the rational heat capacity of the HWS

In addition to the given limit and rational modes, the automated technique allows you to calculate all the HP and HA parameters that provide the heating mode of the HSPP for arbitrary values of the thermal power of the HWS with further comparison and analysis of the investigated modes and the selection of the most promising one.

V. CONCLUSION

The technology of using a heat pump and a heat accumulator to transfer the operation of the gas station to the heating mode (hot water supply of residential buildings) is substantiated. An automated method for determining the rational parameters of HP and HA for the implementation of the heating technology of the HSPP has been developed. The following provisions were obtained.

1. Using the developed automated calculation method, it was analyzed and determined that the passage of the full flow of water passing through the hydraulic unit through the HP is impractical and inefficient, because the energy consumption in the HP compressor many times exceeds the consumption of the hydro unit in pumping mode, which devalues the proposed measure as energy-saving.

2. The use of a heat pump and a heat accumulator at

the HSPP for hot water supply needs will save a third of conventional fuel consumption compared to a boiler unit.

3. The developed automated method allows to calculate the limit and rational values of the design and mode parameters of HP and HA, which ensure the heating mode of operation of the gas power plant to meet the needs of hot water supply.

REFERENCE

[1] Olishevskyi, H., & Olishevskyi, I. (2017). Justification of the method of heat utilization of the air conditioning system for the heat pump heating system. Information systems, mechanics and control, (17), 86–94. https://doi.org/10.20535/2219-3804172017102874

[2] Olishevskyi, H., & Olishevskyi, I. (2014). Obgruntuvannja zastosuvannja teplonasosnogo obladnannja dlja teplofikacijnogo rezhimu kondensacijnih elektrostancij. Visnik Dnipropetrovs'kogo universitetu, (22), 135-140. URL: http://rocketspace.dp.ua/index.php/rst/issue/view/2

[3] Olishevskyi, H., & Olishevskyi, I. (2015). Obgruntuvannja zastosuvannja teplonasosnogo obladnannja dlja utilizacії teplovih vtrat v silovih transformatorah velikoї potuzhnosti / H.S. Olishevskyi, I.H. Olishevskyi // Visnik Dnipropetrovs'kogo universitetu, (23), 131–136. URL: http://rocketspace.dp.ua/index.php/rst/issue/view/4

[4] Olishevskyi I.H. (2015). Obgruntuvannja racional'noї shemi teplonasosnoї sistemi opalennja. Mehanika giroskopichnih system, (30), 26–35. URL: http://nbuv.gov.ua/UJRN/mgs_2015_30_5 DOI: http://dx.doi.org/10.20535/0203-377130201573171

[5] Tkachenko S.J., Ostapenko O.P. (2009). Parokompresijni teplonasosni ustanovki v sistemah teplopostachannja: monografija. Vinnicja : VNTU.

[6] Zakon Ukraïni №1959-VIII vid 21.03.2017 «Pro vnesennja zmin do Zakonu Ukraïni «Pro teplopostachannja» shhodo stimuljuvannja virobnictva teplovoї energії z al'ternativnih dzherel energії».

[7] Tkachuk K.K.. (2015). Perspektivi zastosuvannja teplovih nasosiv v Ukraïni, Visnik NTUU "KPI", (27), 144–153.

[8] Arsen'ev V.M., Melejchuk S.S. (2018). Teplovi nasosi: osnovi teorії i rozrahunku. SDU.

[9] Ostapenko, O. P., Leshhenko, V. V., & Tihonenko, R. O. (2014). Energetichna efektivnist' parokompresijnih teplovih nasosiv z elektrichnim ta kogeneracijnim privodami.

[10] Jin, T. (2022). Improving Korean Energy Efficiency Resource Standards to Vitalize Energy Efficiency Investment. Journal of Energy Engineering, 31(2), 87–97. https://doi.org/10.5855/energy.2022.31.2.087.

[11] Fan, J., Sun, F. Z., & Gao, M. (2013). Experimental Research on a Heat Pump Water Heater Using Low Pressure Steam as Heat Source. Advanced Materials Research, 805-806, 637–644. https://doi.org/10.4028/www.scientific.net/amr.805-806.637.

[12] Aguilar, F., Crespí-Llorens, D., Aledo, S., & Quiles, P. V. (2021). One-Dimensional Model of a Compact DHW Heat Pump with Experimental Validation. Energies, 14(11), 2991. http://dx.doi.org/10.3390/en14112991.

[13] Ding, D. F., Chai, J. H., Wang, L. F., & Chen, W. (2013). An Experimental Research on a Phase Change Heat-Storage-Type Heat Pump Water Heater. Applied Mechanics and Materials, 448-453, 3413–3416. http://dx.doi.org/10.4028/www.scientific.net/amm.448-453.3413.

[14] Zhou, Z. X. (2014). Statistical Analyses on Usage of Water Heater in Urban Residential Buildings. Applied Mechanics and Materials, 521, 748–751. http://dx.doi.org/10.4028/www.scientific.net/amm.521.748.

[15] Zhao, Z., Zhang, Y., Mi, H., Zhou, Y., & Zhang, Y. (2018). Experimental Research of a Water-Source Heat Pump Water Heater System. Energies, 11(5), 1205. https://doi.org/10.3390/en11051205

[16] Pérez-Lombard, L., Ortiz, J., Coronel, J. F., & Maestre, I. R. (2011). A review of HVAC systems requirements in building energy regulations. Energy and Buildings, 43(2-3), 255–268. https://doi.org/10.1016/j.enbuild.2010.10.025

Стаття надійшла до редакції 05.02.2023

АВТОМАТИЗОВАНА МЕТОДИКА РОЗРАХУНКУ ПАРАМЕТРІВ ДЛЯ НЕТРАДИЦІЙНОЇ ТЕХНОЛОГІЇ ТЕПЛОФІКАЦІЙНОГО РЕЖИМУ ГІДРОАКУМУЛЮЮЧОЇ СТАНЦІЇ

ОЛІШЕВСЬКИЙ І.Г. аспірант та асистент кафедри безпеки інформації та телекомунікацій НТУ «Дніпровська політехніка», Дніпро, Україна, e-mail: olishevskiyih@gmail.com;

ГУСЄВ О.Ю. к.ф.-м.н., професор кафедри безпеки інформації та телекомунікацій, НТУ "Дніпровська політехніка", м. Дніпро, Україна, e-mail: gusev1950@ukr.net;

ОЛІШЕВСЬКИЙ Г. С. к.т.н., доцент кафедри електроенергетики НТУ «Дніпровська політехніка», Дніпро, Україна, e-mail:;

Мета роботи. *Обґрунтування раціональних параметрів теплових насосів та теплових акумуляторів для забезпечення ефективної роботи ГАЕС в теплофікаційному режимі. Розробка автоматизованої методики розрахунку раціональних параметрів для комплексної системи ГАЕС, що працює в теплофікаційному режимі.*

Методи дослідження. *Математичний аналіз та моделювання.*

Отримані результати. *Використовуючи розроблену автоматизовану методику розрахунку було проаналізовано та визначено, що пропускання через тепловий насос повного потоку води, що проходить крізь гідроагрегат недоцільне та неефективне, тому що енерговитрати в компресорі теплового насосу в рази перевищують витрати гідроагрегату в насосному режимі, що знецінює запропонований захід як енергозберігаючий.*

Застосування теплового насосу та теплового акумулятора на ГАЕС для потреб гарячого водопостачання дозволить на третину зекономити витрати умовного палива у порівнянні з котельним агрегатом.

Розроблена автоматизована методика дозволяє обчислювати граничні та раціональні значення конструктивних та режимних параметрів теплового насосу та теплового акумулятору, які забезпечують теплофікаційний режим роботи ГАЕС для забезпечення потреб гарячого водопостачання.

Наукова новизна. *Розроблено автоматизовану методику розрахунку параметрів комплексної системи*

ГАЕС, що працює в теплофікаційному режимі. Введено поняття граничної теплової потужності гарячого водопостачання теплового насосу Qгр. Введено поняття раціональної теплової потужності гарячого водопостачання теплового насосу Qрац. Крім граничного та раціонального режимів, розроблена методика дозволяє розраховувати усі параметри теплового насосу та теплового акумулятору, що забезпечують теплофікаційний режим ГАЕС, для довільних значень теплової потужності гарячого водопостачання, з подальшим порівнянням та аналізом досліджуваних режимів й вибором найбільш перспективного.

Практична цінність. *Обґрунтовано технологію застосування теплового насосу та теплового акумулятора для переводу функціонування ГАЕС в теплофікаційний режим (гаряче водопостачання житлових будівель). Доведено можливість економії умовного палива при застосуванні запропонованої технології.*

Ключові слова: Тепловий насос; тепловий акумулятор; автоматизація; енергозбереження; гідроакумулююча електростанція; теплова потужність.