UDC004.94: 621.314

ADAPTIVE MODELS OF THE FOUR-SWITCH BUCK-BOOST CONVERTER

VASYLENKO O.V. Ph.D, Associate professor, Associate professor of the department of information security and nanoelectronics,National University "Zaporizhzhia Polytechnic", Zaporizhzhia, Ukraine, e-mail: drvasylenkoolga@gmail.com,ORCID: https://orcid.org/0000-0001-6535-3462;

SNIZHNOI G.V. Sci.D, Professor, Professor of the department of information security and nanoelectronics,National University "Zaporizhzhia Polytechnic", Zaporizhzhia, Ukraine, e-mail: snow@zp.edu.ua,ORCID: https://orcid.org/0000-0003-1452-0544.

Purpose. *development of an economic adaptive model for the power stage of a four-switches buck-boost converter (FSBB) together with a control system that adequately simulates all modes of its operation.*

Methodology.*The main research method is mathematical modeling; empirical formulas are used to calculate the model parameters; a behavioral programming approach is used for the structural synthesis of the converter model.*

Findings. *The prospects for using a FSBB converter in energy conversion systems where the input and output voltages vary relative to each other are shown. The advantages of using computer-aided design (ECAD) programs for modeling converters together with control systems as multi-domain systems are identified.Approaches to modeling converters together with control systems are analyzed and limitations of using models based on "state space averaging" for studying electromagnetic characteristics and temperature management in the power stage of the converter are indicated.*

A method for forming a dynamic FSBB model forECAD program Micro-Cap12based on simulating the behavior of power switches over time and replacing them with programmable resistors is proposed. To control the rigidity of the model and accelerate the simulation, optimal values of the resistances of these resistors are obtained.A converter model was developed for the PSIM program too and a comparative analysis of modeling and simulation quality indicators in the Micro-Cap and PSIM programs was conducted.Recommendations for the fields of use of the developed models have been formed.

Originality. *The scientific novelty of the work lies in the way of presenting an economical Spice-compatible dynamic model of FSBB, in which the power stage and the control system are integrated through the use of behavioral models for power switches. In these behavioral elements, the switching conditions are programmed by comparing the carrier signal with the reference of the PWM control subsystem; both signals are normalized and the reference is proportional to the duty cycle. By dynamically redefining the duty cycle parameter, the model is adapted for any converter mode (buck, boost, and transition), which makes it universal.A simple converter model was also developed together with a control system for the PSIM program, which makes it possible not only to analyze electromagnetic characteristics, but also to importto SmartControl the necessary transfer functions for optimal controller synthesis.*

Practical value.*The proposed models allow analyzing dynamic processes in the FSBBconverter, optimally combining such contradictory indicators of simulation quality as accuracy and efficiency.The model for Micro-Cap allows to adequately simulate the transient processes of the power stage of the converter, since it is obtained without prior linearization and averaging, in addition, it can be supplemented with temperature coefficients, this option is absent for the PSIM model. The PSIM model makes it possible to obtain a transfer function for the synthesis of the control system.*

Keywords: FSBB converter; ECAD programs; Switching models;programmable behavioral elements, model quality indicators.

I. INTRODUTION

There are many electronic systems that must operate in both DC/DC step-down and step-up modes, and with increasing demands on the quality and controllability of energy transmission and conversion within the Industry 4.0 paradigm, the list of systems and devices that require the use of such converters is only expanding every day.Modern electronic energy conversion systems that adapt to variations in voltages and their ratios at the input and output are widely used in electric vehicles, in particular for hybrid vehicles that use combinations of fuel cells, batteries and supercapacitors, in photovoltaics and other sustainable development industries [1]. Some systems such as USB Type-C™ ports have a variable output voltage that can be higher or lower than the input voltage (USB Type-C has port voltages selectable from 5 V to 20 V).

To coordinate the parameters of electric energy in systems where the equipment is powered by a battery (or uses battery as a backup power source), it is necessary to use converters that can implement Buck or Boost mode

© Vasylenko O.V., Snizhnoi G.V., 2025
Creative Commons Attribution-ShareAlike 4.0 International License**(CC-BY-CA 4.0)**
DOI: https://doi.org/10.15588/1607-6761-2025-2-5

depending on whether the battery voltage is higher or lower than the operating voltage on the load side and to maintain the control of energy flow [2].

Converting input voltage into a regulated output voltage can be really hard in case if the input voltage varies from a level below to a level above the desired output voltage. For example, when the battery is fully charged, its voltage is higher, but then it becomes lower than the load voltage as the battery voltage drops during discharge, therefore, the converter must be capable of functioning as a boost (step-up) converter at low input voltages and as a buck (step-down) converter at high input voltages. At the same time, it must provide transition modes between buck and boost and vice versa.

Practical noninverting buck-boost solutions, those needed in automotive battery stabilization, industrial computers, USB power delivery and variable supplies for amplifiers, often consist of a two-stage approach, where a boost followed by a buck, or a two-winding approach such as the single-ended primary-inductor converter (SEPIC), Zeta or Flyback [3].

One of the promising converters that can meet the high requirements for switching from buck to boost mode and vice versa is a bidirectional single-stage non-inverting converter with one inductor and four switches (four-switch Buck-Boost, FSBB), it has a smaller size and higher efficiency [4, 5].

FSBB design requires advanced mathematical support, an essential part of which are mathematical models of varying degrees of accuracy, versatility, and cost-effectiveness. Designing electricity conversion systems based on FSBB requires modeling at different stages and levels of abstraction to make optimal decisions, which in turn requires the development of a wide range of models for FSBB.

To simplify the designer's work, it is desirable to use universal models, the accuracy (and, accordingly, complexity) of which can be changed depending on the research tasks: from basic, the simplest for assessing the initial circuit reliability, to the most accurate (physical) for detailed calculations of phase variables, organization of temperature management, and so on.

II. ANALYSIS OF LAST RESEARCHES

Analysis of publications that provide methods for modeling the converter showed that two approaches are mainly used for modelingof converters.

In the first approach, the so-called Switching models are used and the converter model is obtained in the form of a system of nonlinear algebraic-differential equations.Switching models simulate the behavior of an electrical circuit in the time domain almost as if it were built on a breadboard with all its nonlinearities. Usually, accurate models are used for semiconductor components and inductive elements, parasitic parameters of the components are added too. Since the transient process of establishing a steady state lasts a long time (tens and hundreds of milliseconds), and the processes associated with parasitic components, on the contrary, are very fast, the model of the entire converter is rigid due to the large difference in the time constants. Therefore, during the simulation, convergence problems (at the linearization stage) and stability (at the discretization stage) are possible, and, as a result, the simulation time can be very long if there is no loss of adequacy [6].

Switching models unfortunately do not allow for adequate modeling of frequency characteristics, so a second approach is used, based on Averaged models, which do not contain switching components. Instead, they contain an equation of state that describes the average behavior of the system. Very briefly, this modeling technique boils down to three steps: obtaining equations for different operating states, obtaining equations for the averaged state space by applying weighted averaging to each variable in these equations, and adding small signal perturbations to the small signal model of the switching converter [7].

In fact, the technique of "state-space averaging" consists of smoothing out the discontinuity associated with the switch transitions between ON and OFF states. The result is a set of continuous algebraic nonlinear equations in which the coefficients of the state equation now depend on the duty cycles D and D′=(1-D). The linearization process ultimately results in a set of continuous linear equations with complex coefficients, which allows obtaining characteristics in the frequency domain in small-signal analysis on alternating current to identify low-frequency models of power converters.

For programs based on Spice solvers, averaged PWM models were developed in the form of sources whose output voltage is proportional to the duty cycle [8]. It has been shown to provide excellent experimental correlation, even in the neighborhood of the Nyquist frequency (usually 1/2 the switching frequency) [9].

The second approach is convenient for the synthesis of a converter as an automatic control system (ACS), for a quick analysis of the steady state of the system in the time or frequency domain. The main variables in the state-space model, called state variables, are associated with memory or energy storage mechanism. For converters, this is the input signal (for example, source voltage and source current), phase variables at the output, and control path parameters. But to obtain a model in state space, it is necessary to make a number of serious assumptions: the converter operates in a steady state without any external disturbances, the switch models are ideal, i.e. there is no voltage drop during the ON state and no current during the OFFstate. This makes it impossible to almost realistically analyze power profiles, both active and reactive.

In the article [10] an averaged linearized small-signal model for FSBB with the ability to model inductance energy was proposed, which allows to correctly describe the dynamics associated with phase

shift, in addition to those associated with duty cycles. The energy properties of the converter were not considered.

In the article [11], FSBB was modeled using block diagrams with models of the ACS blocks obtained by the Laplace transform in steady state mode (Averaged models).The dynamic model of the FSBB was presented in the article [12]. It was developed to study system dynamics and the power request of a proton exchange membrane fuel cell (PEMFC).The converter model takes into account the transition mode between Buck and Boost modes, but the power stage model is averaged and linearized by removing higher order terms to obtain the equivalent topology of the FSBB converter, since the power stage is considered only as a control object (Plant).The article [13] also adopts the state space averaging method to build the converter model [14].

There are also specific approaches to modeling FSBB. For example, the article [15]presents a behavioral model of the converter for comparing energy management strategies in photovoltaic systems. To approximate the power loss profiles of each switching cell of the converter based on regression equations (polynomials of many variables), coefficients were found, including using neural networks. Then, components (RCL) were added to these macromodels that emulate power losses by power switches to form a complete converter model. Thus, this model allows solving only one specific energy problem.Analysis of the equivalent circuit of this behavioral model showed that it is a composition of block diagrams with transfer functions and RCL components [16], which is a convenient approach for studying the stability of the converter as an automatic control system.

III. FORMULATION OF THE WORK PURPOSE

Optimal design of power conversion systems requires preliminary modeling, which includes a model development stage (modeling) and a simulation stage, during which directions for system optimization should be obtained. For a comprehensive study of FSBB, a model is needed that would allow analyzing electromagnetic characteristics in the power stage, therefore the aim of the work is to develop universal FSBB models that are capable of providing reliable simulation of all its modes in the appropriate software,i.e. it should be adaptive.

FSBB models presented in various publications either require expensive software or are a trade secret of manufacturers. Since the model should provide the opportunity for detailed study of electromagnetic processes in the power stage of the converter, preliminary linearization and averaging are unacceptable here.The aim of the research is to develop a model that will allow analyzing dynamic processes in the converter, optimally combining such contradictory quality indicators as accuracy and cost-effectiveness.

IV. EXPOUNDING THE MAIN MATERIAL AND RESULTS ANALYSIS

Definition of basic parameters and functions for modeling FSBB.

The simple electrical circuit of the FSBB converter is obtained by connecting buck and boost stages along with the combining of an inductance coil, as shown in Fig. 1. Therefore, merging and simplifying cascaded buck and boost converters creates a single-inductor system. Despite the addition of two switches, the elimination of one inductor provides a significant reduction in the size of the converter, and an increase in efficiency. The four-switch structure allows selecting transistors based on the output voltage instead of the input voltage, which also makes the design cheaper and reduces the stress on the transistors. Also, selecting boost-leg switches based on the output voltage instead of the input voltage allows using devices with a lower gate charge. Moreover, it is possible to use a common control system, which increases the reliability and consistency of the system's operation.

The four-switch buck-boost power stage (Fig. 1) consists of a buck leg (IGBTs S_1, S_2 and switch-node SW1) at the high side (HS-indexes), a boost leg (IGBTs S_3, S_4 and switch node SW2) at the low side (LS-indexes), an inductor L between the two switch nodes and capacitors (input C_{in} and output C_{out}).

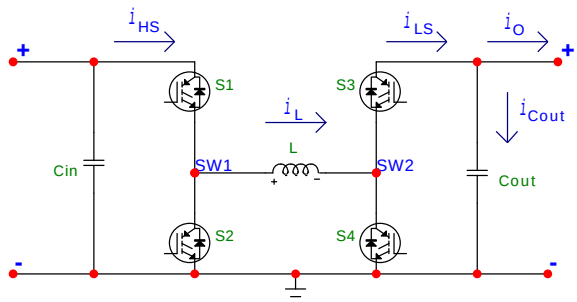

Figure 1. Electrical circuit of the FSBB converter

The FSBB has three operating modes depending on the relative levels of input and output voltages: buck mode ($V_{HSmin} > V_{LSmax}$), boost mode ($V_{HSmin} > V_{LSmax}$) and buck-boost (transition) mode (Fig.2).

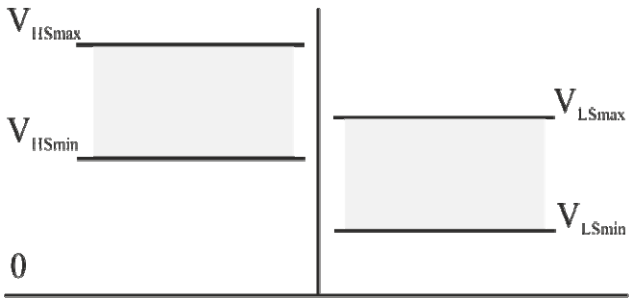

Figure 2. The FSBB operating modes

A single PWM controller can drive the power switches in all operating modes including buck, boost and the transition region, during which the input and output voltages are nearly identical. This system allows energy to flow in both directions, meaning FSBB is bidirectional. When the input voltage (V_{HS}) is higher than the desired output voltage (V_{LS}), the buck leg switches operate (buck mode) and the boost switches are static (100 % duty cycle). The switching pattern is identical to a buck converter.

In the transition region, all four switches must operate with a blend of buck and boost action at the inductor to maintain the desired regulated voltage across the load. Therefore, the buck-boost mode consists of alternating buck and boost cycles. In boost mode, the buck high-side switch is always turned on and the boost leg transistors are switching. The switching pattern is identical to a boost converter.

To validate the model, we need to determine the main parameters of the system. We are going to use them later to estimate the accuracy of the model. The main parameters of the power stage of the converter are the maximum I_{Lmax} and average current through the inductance $I_{LAVG}$and ripples of this current Δi_L. These parameters are determined based on the following functions: output current I_0, high-side current I_{HS} and voltage V_{HS}, low-side current $I_{LS}$and voltage V_{LS} (Fig.1).

$$I_{LSAVG} = I_0 \Longrightarrow I_{LAVG} \cdot T_{OFF} = I_0 \cdot T$$

$$I_{LAVG} = \frac{I_0 \cdot T}{T_{OFF}} = \frac{I_0}{1-D}$$

$$I_{L\,max} = I_{LAVG} + \frac{\Delta i_L}{2}$$

$$\Delta i_L = \frac{V_{HS}}{L} \cdot T_{ON} = \frac{V_{LS}}{L} \cdot T_{OFF} \qquad (1)$$

Where $T_{ON}$and T_{OFF} are the ON state and OFF state durations of switch S_1, respectively and D is a duty cycle.

Maximum current through the inductor L could be obtained like this

$$I_{L\,max} = \frac{I_0}{1-D} + \frac{1}{2} \cdot \frac{V_{LS}}{L} \cdot T_{OFF}$$

The transfer function has been obtained through a volt-second balance:

$$V_{HS} \cdot T_{ON} = V_{LS} \cdot T_{OFF}\,, \quad \frac{V_{LS}}{V_{HS}} = \frac{D}{1-D} \qquad (2)$$

Where V_{LS} is the output voltage V_0.

Choosing a program for design

We tested two programs for the choosing the optimal one: Spice-compatible ECAD program Micro-Cap 12 (https://archive.org/details/mc12cd_202110) and Altair® PSIM™ (https://altair.com/psim). Micro-Cap12 was chosen due to the fact the models of power switches are accurate and even could take into account temperature dependence and the type of case. The full professional version is absolutely free. Another advantage of Micro-Cap is that the post-processor makes it possible to analyze a wide range of circuit functions, from flux coupling, charges and conductances to reactive power and so on. That is, it is possible to conduct a deep analysis of the physics of processes. Instead, PSIM provides very limited possibilities in this field: only phase variables are available for visualization. At the same time, the PSIM program has been specially developed for the simulation of converters and provides high simulation speed (mostly because of simplified models), which provides a reliable, stable and efficient solution. PSIM is an Altair Group product and now the Altair provides ukranian users with the opportunity to use student versions for free, or, after registering an educational institution in the Altair database, to use the full version for a year, or to purchase this program in the functional set that suits you.

Simulations through a graphical interface allow us drawing the circuits through different menus that contain all the necessary elements. Both programs allows us to obtain the electromagnetic characteristics of power electronics systems by performing analysis in the time and frequency domains, obtaining graphs of transient processes and Bode graphs. The search for optimization directions is carried out using multivariate analysis, when the internal and external parameters of the schemes change.

All switched-mode power supplies (SMPS) are nonlinear, time varying (dynamic) systems, due to the switching actions. However, they can be modeled with an averaged small signal, linearized model, which is valid up to the power supply switching frequency $f_{SW}/2$, with the maximum bandwidth of an SMPS is about 1/10 to ~1/5 of the switching frequency f_{SW}. Therefore, the linear control loop stability analysis using Nyquist and Bode plots also can be applied.

In Micro-Cap12 and PSIM, there are enough blocks in the library to build an analog or digital control circuit. But there is another way, which allows us to obtain more specific characteristics by performing the stability analysis of converters as the automated systems, for example, by analysis of Phase Margin. To design converters compatible with control systems, we can use SmartControl (https://altair.com/SmartControl) – a program for optimal synthesis of controllers and not only. This software specifically designed for power electronics applications (https://powersimtech.com). There is no student version of SmartControl, you need to purchase a full license, but with SmartControl, it's easy to understand how to adjust the control requirements in terms of stability and bandwidth. In addition, SmartControl is seamlessly integrated with simulation tools of PSIM. SmartControl provides detailed information about the designed compensator (resistor,

capacitors or z-domain coefficients), and about the power stage and steady-state waveforms [1].

Of course, there are Micro-Cap12, PSIM and SmartControl user manuals, but the development of a converter simulation technique where programs must be used for simulation at certain stages is of considerable interest. It is also of interest to develop a methodology that maximally simplifies the design of FSBB with a control scheme.

Power stage modeling and simulation

Consider the modeling stage of the power stage of the converter with parameters: V_{in}=250V; L=500μH; D = 0.706 (referred to $S1$ on Fig.1); I_0=2A; f=100kHz. Given that the FSBB operates in continuous conduction mode, all the necessary parameters to validate the simulation results were calculated by the formulas 1 and 2:

On-state inductor voltage

$$V_{Lon} = V_{in}, V_{Lon} = 250V .$$

Off-state inductor voltage

$$V_{Loff} = -V_0, V_{Loff} = -600.34V .$$

Inductor average current

$$I_L = \frac{I_0}{1-D} = 6.803A .$$

Inductor current ripples

$$\Delta i_L = \frac{V_{in} \cdot D}{L \cdot f_{SW}} = 3.53A .$$

Maximum inductor current

$$I_{L\,max} = I_L + \frac{1}{2} \cdot \Delta i_L = 8.568A$$

Minimum inductor current

$$I_{L\,min} = I_L - \frac{1}{2} \cdot \Delta i_L = 5.038A$$

We are assuming ideal components in this example, but the software allows users to define parasitic values and temperature effects, as well.

We have developed a behavioral model of the FSBB converter for the Micro-Cap 12, which is shown on Fig.3.

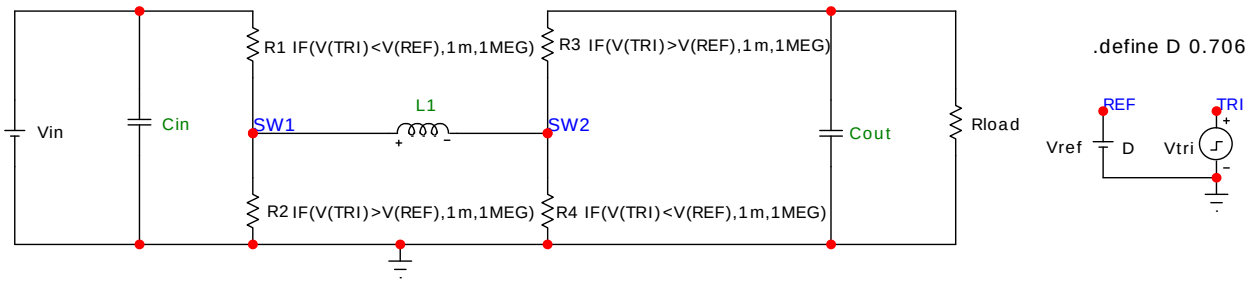

Figure 3. The behavioral Spice-model of the FSBB

This compact and original model combines a pulse width modulation (PWM) system with the properties of electronic switches to change their resistance. That is, the control subsystem is included to the model in an adapted form, which is not tied to the type of PWM (analog or digital), since it only provides a control algorithm, setting the law of changing the resistance of the switches, thereby turning them into behavioral elements. Such modulated, programmable resistors can emulate any power transistors, so this model is universal. We replaced the transistors with resistors to speed up the simulation, because with physical models of transistors, even such a simple scheme is rigid and requires dozens of iterations of solving nonlinear algebraic equations at each time step.

With such a large inductance, the Micro-Cap required about 100.000 steps to simulate in *Transient* mode. We also suggest using the duty cycle value as a reference signal (given by the Vref source).It is possible to program the trend of its change depending on the selected profile of consumed power, which greatly simplifies the model.

The value of resistances is programmed as follows:

Alorithm for diagonal R1-R4:

If V(Vtri)<V(Vref)

Then R=1e-4 [Ohm]

Else R=1e6 [Ohm]

That is, when the amplitude of the triangular (carrier) signal emulated by the Vtri source is less than the amplitude of the reference signal, the R1-R4 diagonal resistors (aka transistors) are turned on (their resistance drops to 0.1mOhm). At the same time, the R2-R3 resistors (aka transistors) are turned off and have a high resistance (1Meg Ohm).

Alorithm for diagonal R2-R3:

If V(Vtri)<V(Vref)

Then R=1e-4 [Ohm]

Else R=1e6 [Ohm]

That is, when the amplitude of the triangular signal becomes greater than the amplitude of the reference signal, the transistors of the diagonal R2-R3 are turned on. At the same time, the R1-R4 diagonal transistors are turned off.

So, in these behavioral elements, the switching conditions are programmed by comparing the carrier signal with the reference of the PWM control subsystem; both signals are normalized and the reference is proportional to the duty cycle. By dynamically redefining the duty cycle parameter, the model is adapted for any converter mode (buck, boost, and transition), which makes it universal.

The difference between the maximum and minimum values of transistor resistances determines the stiffness/rigidity of the model and, accordingly, affects the simulation time. At the same time, the minimum conductivity should not be less than a fixed parameterG_{min}.

The results of the simulation of the main variables (current through the inductance and voltage across the inductance) of boost mode FSBB in Micro-Cap 12 are shown in Fig.4.

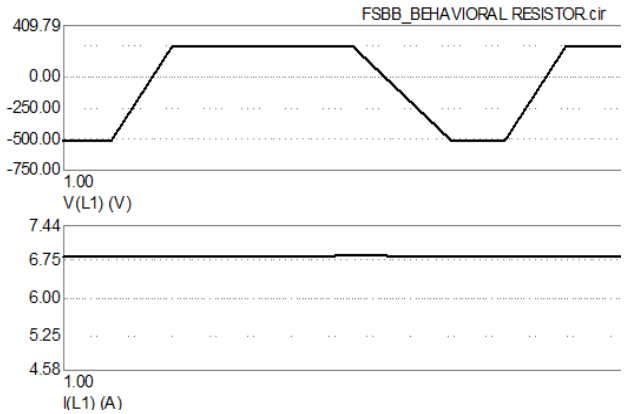

Figure4. The results of the FSBB simulation

These results were compared with the theoretical calculation at Duty Cycle 0.7, input voltage $V_{in} = 250\ V$, performed according to the above formulas. There is an error in determining the Off-state inductor voltage of 12 %, due to the fact that with such a large inductance, the transient process lasts for several seconds. The inductance current is determined quite accurately.

Fig.5 shows the FSBB converter model, obtained in the PSIM program. Ideal models for switches are selected here (in fact, this is the same approach used to build the behavioral model in Micro-Cap). All connections (wires) in the power cascade are marked in red, in the control subcircuit they are marked in green, the color is related to the features of their modeling and simulation in PSIM.The clock icon corresponds to the menu for setting the simulation parameters, in particular the step and time interval for visualization in the SimView post-processor (launched automatically after error checking at the modeling stage and solving the differential-algebraic equations of the model at the simulation stage). To make the circuit look cleaner (without wires crossings), we used remote*G*-connectors to tie the power stage with the control one.

The PWM modulator is constructed by comparing a ramp (triangular signal) at the switching frequency and a DC voltage (DC signal). For controlling, the simple PWM model is designed, where the duty cycle is formed automatically by comparing the carrier triangle signal of 100 kHz with the reference signal. If the ramp is defined between 0 and 1 V voltage, then the value of the continuous signal corresponds with the value of the duty cycle. Therefore, as a reference, we again suggest using the *duty cycle* value, which can then be automatically varied, imitating the operation of control systems. This simple PWM controller generates two different trains of control pulses for transistors, in this case for each diagonal separately (in antiphase to each other). The results of the simulation are shown in Fig.6.

Unfortunately, even with a significant simplification of the model, the simulation in Micro-Cap12 lasted much longer than in PSIM.

The upper graph shows the inductor voltage, the lower graph shows the inductor current. The averaged inductor current can be obtained through a special dynamic averaging function (in the upper right corner). With the given Data, the converter works in boost mode, continuous current mode.

As you can see, the developed model is adequate: the error is within 5%. The variation of the duty cycle in the sweep parameter subroutine (block Param Sweep, shown in Fig. 6) allows us to examine the converter in all modes.

The advantages and disadvantages of the programs used for FSBB modeling are summarized in Table 1.

But this comparison will not be complete if we do not take into account the possibility of mutual import and export of data between PSIM and SmartControl Altair programs. This potential, as well as the high speed of simulation determined our choice of PSIM for further research.Currently, our university is at the stage of signing an agreement to receive full versions of Altair group programs.

The comparative table makes it possible to determine the appropriate software depending on the research tasks. If your goal is the analysis of electromagnetic characteristics with subsequent temperature management, we recommend using the model for Micro-Cap (Fig. 3). If your task is the synthesis of an optimal control system, we recommend using a model for PSIM followed by importing the transfer function into SmartControl [1].

V. CONCLUSION

For research into energy systems in the photovoltaic and electric transport industries, it is necessary to have a simple but adaptive (for each operating mode) model of the FSBB converter together with its control system.We propose two approaches here.

In Spice-compatible programs, you can use the adaptive model of Fig. 3, which allows us to explore the converter with PWM in any mode of operation by simple reprogramming of behavioral elements. If necessary, resistors are replaced with accurate models of transistors (which the professional version of Micro-Cap provides for free) and deeply analyze the physics of the processes in the system. It is also possible to analyze the temperature dependence of phase variables for better temperature management of the converter. For the compensator (we recommend here to use Type3) it's possible to use the

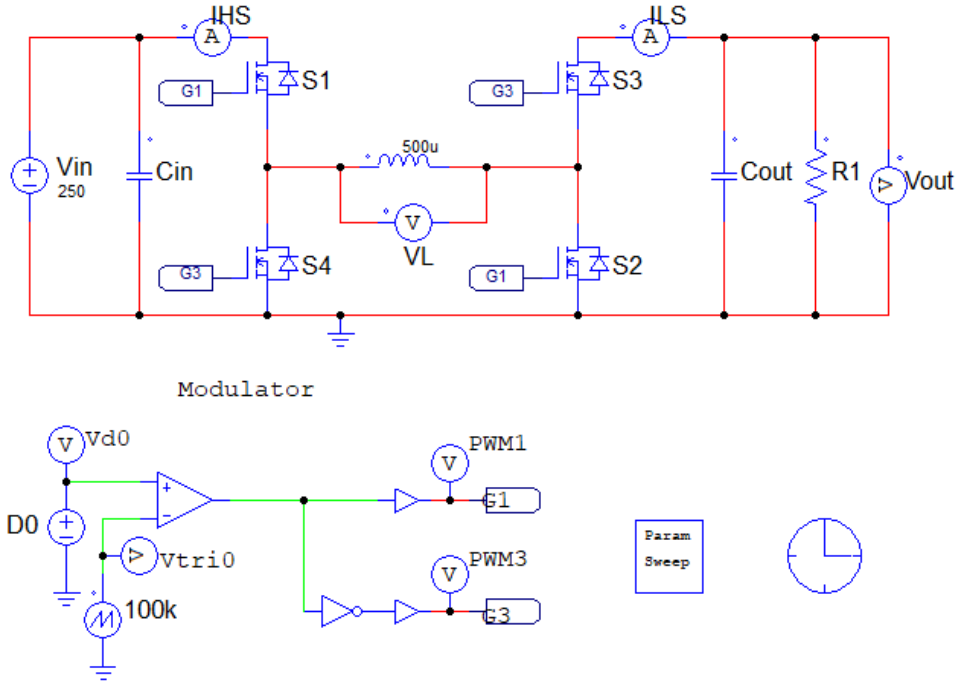

Figure5. The FSBB converter model, obtained in the PSIM program

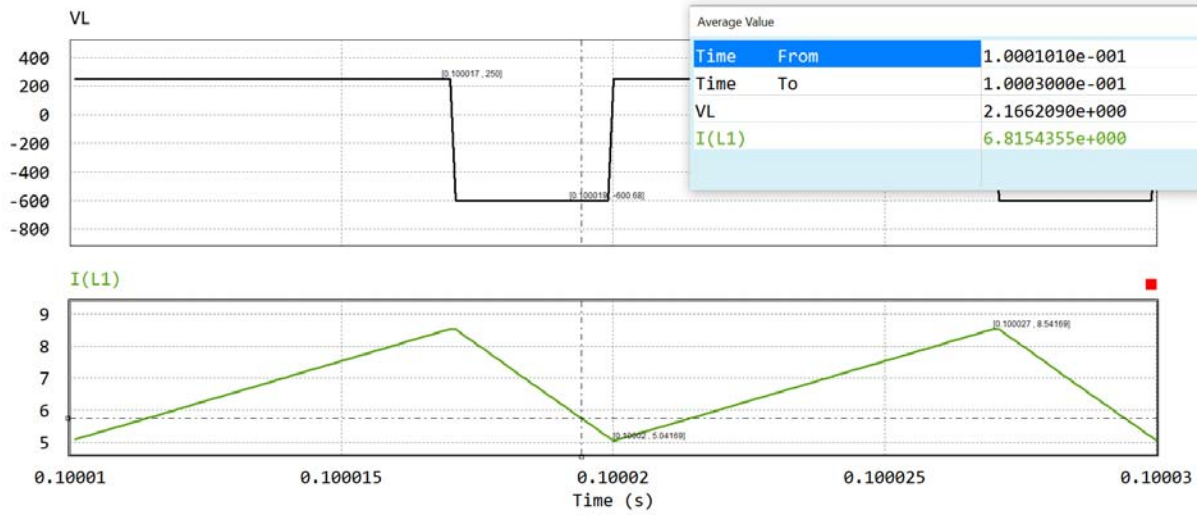

Figure6. The results of the simulation FSBB in PSIM

Table 1. Comparative analysis of modeling and simulation

\ Criterion	Micro-Cap	PSIM
\ Physicality of models	great variability and complexity of models up to ultra-precise physical ones	simple empirical models
\ Post-processor capabilities	very high	very low
\ Assignment of functions for analysis	automatically, all possible functions are available	very limited capabilities, needs manual definition
\ Possibility of programming the behavioral functions of the elements	wide	limited
\ Problems with stiffness of models during simulation	possible	absent
\ Simulation time	very long	very fast
\ Cost of professional version	free of charge	high if used for business

model developed by Christophe Basso [17] from the Micro-Cap library.

Simulation of FSBB converters and other electronic circuits of power electronics together with the controlling circuits is more convenient to perform using a combination of programs PSIM and SmartControl. We used a simple adaptive FSBB converter model (Fig.5) and developed a methodology to ensure easy combination of these programs within the framework of similar studies[1]. This programs allow us to import the parameters of the converter and carry out the synthesis of the controller (including feed-forward) based on the optimal Phase Margin.

REFERENCE

[1] Vasylenko, O.V., Snizhnoi, G.V. (2024). Pidkhodi u modelyuvanni sistem peretvorennya yelektroenergiї v gibridnikh transportnikh zasobakh [Approaches in modeling electrical energy conversion systems in hybrid vehicles]. *Elektrotehnika i elektroenergetika*, 4, 36-47. (in Ukrainian) DOI: https://doi.org/10.15588/1607-6761-2024-4-4

[2] Camara, M.B., Gualous, H., Gustin, F., Berthon, A., Dakyo, B. (2010). DC/DC Converter Design for Supercapacitor and Battery Power Management in Hybrid Vehicle Applications - Polynomial Control Strategy. *IEEE Transactions on Industrial Electronics.* 57, 2, 587-597. DOI:10.1109/TIE.2009.2025283

[3] Soedibyo, Amri, B., Ashari, M. (2015). The comparative study of Buck-boost, Cuk, Sepic and Zeta converters for maximum power point tracking photovoltaic using P&O method. *2nd International Conference on Information Technology, Computer, and Electrical Engineering (ICITACEE)*, 327-332. DOI: 10.1109/ICITACEE.2015.7437823.

[4] Ma, Y., Wang, S., Zhang, S., Fan, X. (2013). An automatic peak-valley current mode step-up/step-down DC-DC converter with smooth transition. *Proceedings of International Conference on ASIC*. 1-4. DOI: 10.1109/ASICON.2013.6812054.

[5] Malou, A., Allard, B., Hijazi, A., lin shi, Xuefang. (2018). 4-Switch Buck-Boost DC–DC Converter: A Case Study. *Journal of Low Power Electronics*. 14. 558-581. DOI:10.1166/jolpe.2018.1583.

[6] Vasylenko, O., Reva, V., Snizhnoi, G. (2019). Simulation of ACS for magnetic susceptibility measurements in ECAD based on time domain functions. *Proceedings of the Second International Workshop on Computer Modeling and Intelligent Systems (CMIS-2019)*, 2353, 689-701. Access mode: http://ceur-ws.org/Vol-2353/paper55.pdf

[7] Plesnik, M. (2006). Use of the State-Space Averaging Technique in Fast Steady-State Simulation Algorithms for Switching Power Converters. *Canadian Conference on Electrical and Computer Engineering*. 2224-2227. DOI:10.1109/CCECE.2006.277579

[8] Vasylenko, O., Snizhnoi, G. (2018). PWM controller's models for investigation ACS in SPICE-family ECAD programs. *Elektrotehnika i elektroenergetika*, 1, 64-71.

[9] Hymowitz, C.E. (1998). Power specialist's app note book. San Pedro. CA 90733-0710 USA, intusoft, 171.

[10] Gallo, E., Biadene, D., Cvejić, F., Spiazzi, G., Caldognetto, T. (2024). An Energy-Based Model of Four-Switch Buck-Boost Converters. *IEEE Transactions on Power Electronics.* 1-11. DOI: 10.1109/TPEL.2023.3349327.

[11] Zhang, W., Lin, H., Zhang, Y., Jin, J. (2017). Modeling and Controlling Strategy of Four-Switch

Buck-boost Convertor with Smooth Mode Transitions. *The Open Electrical & Electronic Engineering Journal.* 11. 57-67. DOI: 10.2174/1874129001711010057.

[12] Qi, Z., Tang, J., Pei, J., Shan, L. (2020). Fractional Controller Design of a DC-DC Converter for PEMFC. *IEEE Access*, 8, 120134-120144, DOI: 10.1109/ACCESS.2020.3005439

[13] Feng, H., Liu, Y., Guo, C., Li, Y., Li, T. (2025). Graphical Smooth Switching Control Method of Four-Switch Buck-Boost Converter in Fuel Cell Systems. *IEEE Access*. 1-1. DOI: 10.1109/ACCESS.2025.3535562.

[14] Wu, C., Si, G., Zhang, Y., Yang, N. N. (2014). The fractional-order state-space averaging modeling of the Buck-Boost DC/DC converter in discontinuous conduction mode and the performance analysis. *Nonlinear Dynamics*, 79, 1, 889–703. DOI: 10.1007/s11071-014-1695-4

[15] Dupe, V., Jammes, B., Seguier, L., Alonso, C. (2013). Behavioral modeling of power losses in FSBB converters. *PCIM Europe Conference Proceedings*.

[16] Torrey, D., Selamogullari, U. (2002). A Behavioral Model for DC-DC Converters using Modelica. *2 International Modelica Conference, Proceedings*, 167-172.

[17] Basso, C. Switch-Mode Power Supplies Spice Simulations and Practical Designs. (2008). McGraw-Hill Professional, ISBN: 978-0-07-158935-2. 117.

Received 12.05.2025;
Accepted 06.06.2025;
Published 14.06.2025;

АДАПТИВНІ МОДЕЛІ ДЛЯ FSBB ПЕРЕТВОРЮВАЧА

ВАСИЛЕНКО О.В. канд. техн. наук, доцент, доцент кафедри інформаційної безпеки та наноелектроніки. Національний університет «Запорізька політехніка», Запоріжжя, Україна, e-mail: drvasylenkoolga@gmail.com, ORCID: https://orcid.org/0000-0001-6535-3462;

СНІЖНОЙ Г.В. д-р техн. наук, професор, професор кафедри інформаційної безпеки та наноелектроніки, Національний університет «Запорізька політехніка», Запоріжжя, Україна, e-mail: snow@zp.edu.ua, ORCID: https://orcid.org/0000-0003-1452-0544.

Мета роботи. *розробка економічної адаптивної моделі силового каскаду чотириключового перетворювача знижувально-підвищувального типу (FSBB) разом із системою керування, яка адекватно моделює всі режими його роботи.*

Методи дослідження. *Основним методом дослідження є математичне моделювання; для розрахунку параметрів моделі використані емпіричні формули; для структурного синтезу моделі конвертера застосовано підхід поведінкового програмування.*

Отримані результати. *Показано перспективи використання FSBB конвертера в системах перетворення енергії, де вхідна та вихідна напруга варіюються відносно одна одної. Визначені переваги використання програм автоматизованого проектування (ECAD) для моделювання перетворювачів разом із системами керування як багатодоменних систем. Підходи до моделювання конвертерів спільно із системами керування проаналізовані та зазначені обмеження використання моделей на базі "усереднення простору станів" для дослідження електромагнітних характеристик та температурного менеджменту в силовій ступені перетворювача.*

Запропоновано метод формування динамічної моделі FSBB для ECAD програми Micro-Cap12 на основі імітації поведінки силових ключів в часі та заміни їх програмованими резисторами. Для контролю жорсткості моделі та прискорення симуляції отримано оптимальні занчення опорів цих резисторів. Розроблено також модель конвертера для програми PSIM і проведено порівняльний аналіз показників якості моделінгу та симуляції в програмах Micro-Cap та PSIM. Сформовані рекомендації по галузям використання розроблених моделей.

Наукова новизна. *Наукова новизна роботи полягає в способі представлення економічної Spice-сумісної динамічної моделі FSBB, в якій інтегруються силова ступінь та система керування завдяки використанню поведінкових моделей для силових ключів. В цих поведінкових елементах запрограмовані умови комутації шляхом порівняння несучого сигнала із референсним контролюючої підсистеми ШІМ; обидва сигнали нормовані і референсний пропорційний до показника dutycycle. Шляхом динамічного перевизначення параметра dutycycle, модель адаптується для будь-якого режиму конвертера (знижувального, підвищувального і транзитного), що робить її універсальною. Розроблено також просту модель конвертера спільно із системою керування для програми PSIM, яка дає можливості не тільки аналізувати електромагнітні характеристики, але й імпортувати необхідні передаточні функції для оптимального синтезу контролерау Smart Control.*

Практична цінність. *Обидві запропоновані моделі дозволяють аналізувати динамічні процеси в FSBB перетворювачі, оптимально поєднуючи такі суперечливі показники якості симуляції, як точність і економічність.Модель для Micro-Cap12 дозволяє адекватно симулювати перехідні процеси силової ступені конвертера,*

оскільки її отримано без попередньої лінеаризації та усереднення, крім того вона може бути доповнена температурними коефіцієнтами, ця опція відсутня для моделі PSIM. Модель PSIM дає можливість отримання передаточної функції для синтезу системи керування.

Ключові слова: FSBB перетворювач; ECAD програми; Switching моделі; програмовані поведінкові елементи; показники якості моделі.